EXPERIMENT MANUAL

SOLAR POWER

GIGANTIC PHOTOVOLTAICS SCIENCE LAB PLUS



Renewable Energy

Instruction Book

THAMES & KOSMOS

RECOMMENDATIONS 1
PARTS LIST 2
HOW DO SOLAR CELLS WORK? 4
USING THE SOLAR PANEL 5
ABOUT THE GEARS 6
ABOUT THE SPROCKETS 8
TIPS AND TRICKS FOR MODEL BUILDING 9
SOLAR POWERED MODELS 10
MODEL 1 - SOLAR-WIND SAIL CAR 14
MODEL 2 - AMPHIBIOUS BOAT 16
MODEL 3 - RACE CAR 18
MODEL 4 - SCOOTER 20
MODEL 5 - MOTORCYCLE 22
MODEL 6 - SIDE-CAR MOTORCYCLE 24
MODEL 7 - LOCOMOTIVE 26
MODEL 8 - BEACH BUGGY 28
MODEL 9 - TRAILER 30
MODEL 10 - FORKLIFT 32
MODEL 11 - ROAD ROLLER 34
MODEL 12 - CEMENT MIXER TRUCK 36
MODEL 13 - TANKER TRUCK 38
MODEL 14 - BACKHOE 40
MODEL 15 - STREET-SWEEPING CAR 42
MODEL 16 - MAINTENANCE CAR 44
MODEL 17 - HELICOPTER 46
MODEL 18 - TWIN-PROP AIRPLANE 48
MODEL 19 - SOLAR CAR WITH CLUTCH 50
MODEL 20 - CRANE 52
MODEL 21 - ELEVATOR 54
MODEL 22 - CABLE CAR 56

GENERAL ADVICE AND WARNINGS FOR PARENTS AND USERS

1. Please read these instructions, follow the safety rules, and keep them for reference. We recommend that you make the models in the order given. You will then be able to better understand the assembly and operation of the parts.
2. This kit has been designed for children over 8 years of age. It aims to help children discover solar power and how solar cells work in a hands-on way as they build fun models.
3. Discuss the safety warnings and possible risks involved with the children before allowing them to build these models.
4. Do not insert the wire connectors and other components into any electrical sockets, which will cause serious damage. Only the recommended batteries are allowed for use in this kit.
5. Cleaning:
   - Clean only with a cloth that is slightly dampened with water.
   - Never use soap or detergent.

⚠ **WARNING TO PARENTS**

This toy is not suitable for children under 3 years of age. It contains small parts that a child could swallow. This toy must be kept out of the reach of very young children.

SAFETY GUIDELINES

1. Don't expose the solar panel to a high temperature light bulb for a long time, so as to avoid a short circuit.
2. While activating the solar vehicles with a light bulb, keep your hands away from the bulb to avoid any harm that could be caused by accidentally touching the hot light bulb.
3. Please experiment with an incandescent light bulb that is at least 60 Watts, or the sunshine outside on a sunny day. An electric flashlight, fluorescent lights, and most low-voltage halogen bulbs are too weak to activate the solar vehicles.
4. Regular, non-rechargeable batteries must not be recharged.
5. The rechargeable batteries can only be charged under the supervision of an adult.
6. Do not force open the battery.
7. Do not throw the battery into the fire.
8. Pay attention to the correct polarity.
9. Do not short-circuit batteries. They could explode!
10. Do not mix new and used batteries.
11. The exhausted batteries must be disposed of as hazardous waste.



12. Remove the batteries when you do not use the kit for a long period of time.
13. Misuse of batteries can cause them to leak, which damages and corrodes the area around the battery, creating the danger of fire, explosion, and personal injury.

WARNING

1. Remove the batteries when not planning to use the device for a long period of time.
2. Misuse of batteries can cause them to leak, which damages and corrodes the area around the battery, creating the danger of fire, explosion, and personal injury.

No.	Part Name	Pcs.
1	PART SEPARATOR TOOL	1
2	REVERSIBLE MOTOR/GENERATOR	1
3	ADJUSTABLE SOLAR PANEL	2
4	11-HOLE ROD	6
5	7-HOLE DUAL LONG ROD	6
6	JOINT PIN	10
7	SHORT FRAME	4
8	LONG FRAME	8
9	LONG AXLE	3
10	MEDIUM AXLE	9
11	SMALL AXLE	3
12	EXTRA LARGE AXLE	2
13	MOTOR AXLE	2
14	ANCHOR PIN	34
15	CHAIN UNIT	41
16	MEDIUM SPROCKET	1
17	SMALL SPROCKET	1
18	LARGE GEAR	2
19	MEDIUM GEAR	4
20	SMALL GEAR	6
21	SHAFT PIN	2
22	SHAFT PLUG	4
23	WASHER	3
24	GEAR FIXING	4
25	LARGE PULLEY	3
26	MEDIUM PULLEY	4
27	SMALL PULLEY	3

No.	Part Name	Pcs.
28	CRANK WITH FLANGE	1
29	CRANK WITHOUT FLANGE	1
30	WORM GEAR II	1
31	ROD CONNECTOR	2
32	WHEEL AND TIRE	4
33	BOAT	1
34	DIGGING BUCKET	1
35	WIRE CONNECTOR - BLACK	2
36	WIRE CONNECTOR - RED	1
37	BATTERY HOLDER	2
38	3-HOLE ROD	10
39	5-HOLE ROD	9
40	3-HOLE DUAL ROD	6
41	SQUARE FRAME	6
42	90 DEGREE CONVERTER - L	4
43	90 DEGREE CONVERTER - R	4
44	TWO-TO-ONE CONVERTER	6
45	HINGE	8
46	CURVED ELBOW ROD	8
47	SPOKED ROUND BLOCK	1
48	O RING LARGE	3
49	O RING MEDIUM	4
50	O RING SMALL	3
51	STRING (400 CM)	1
52	BLADES & RUDDER SHEET	1
53	BUTTON PIN	4
54	DIE CUT CARDBOARD	1
55	BATTERY CHARGER	1
TOTAL		265

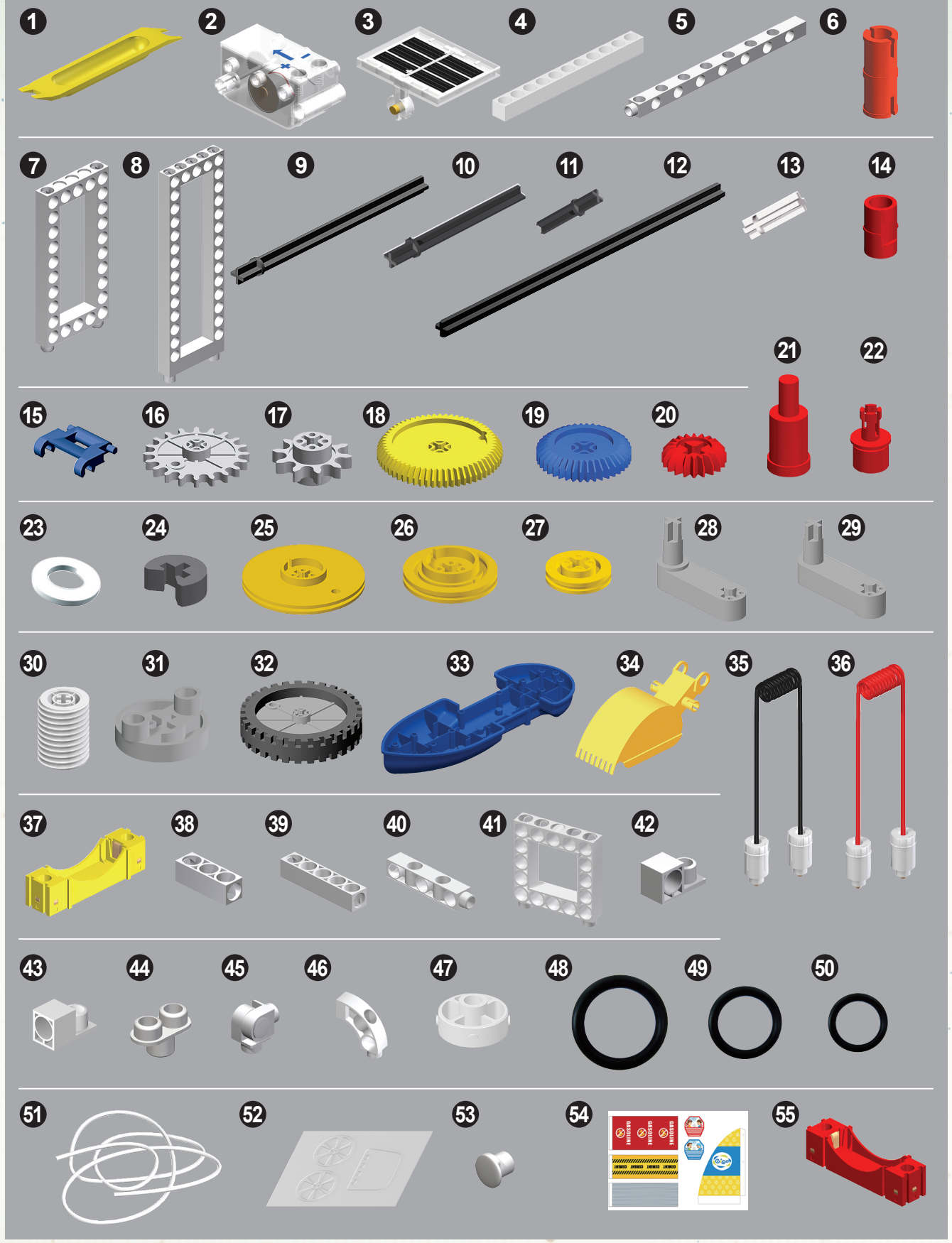
1
2
3
4
5
6
7
8
9
10
11
12
13
14
21
22
15
16
17
18
19
20
23
24
25
26
27
28
29
30
31
32
33
34
35
36
37
38
39
40
41
42
43
44
45
46
47
48
49
50
51
52
53
54
55

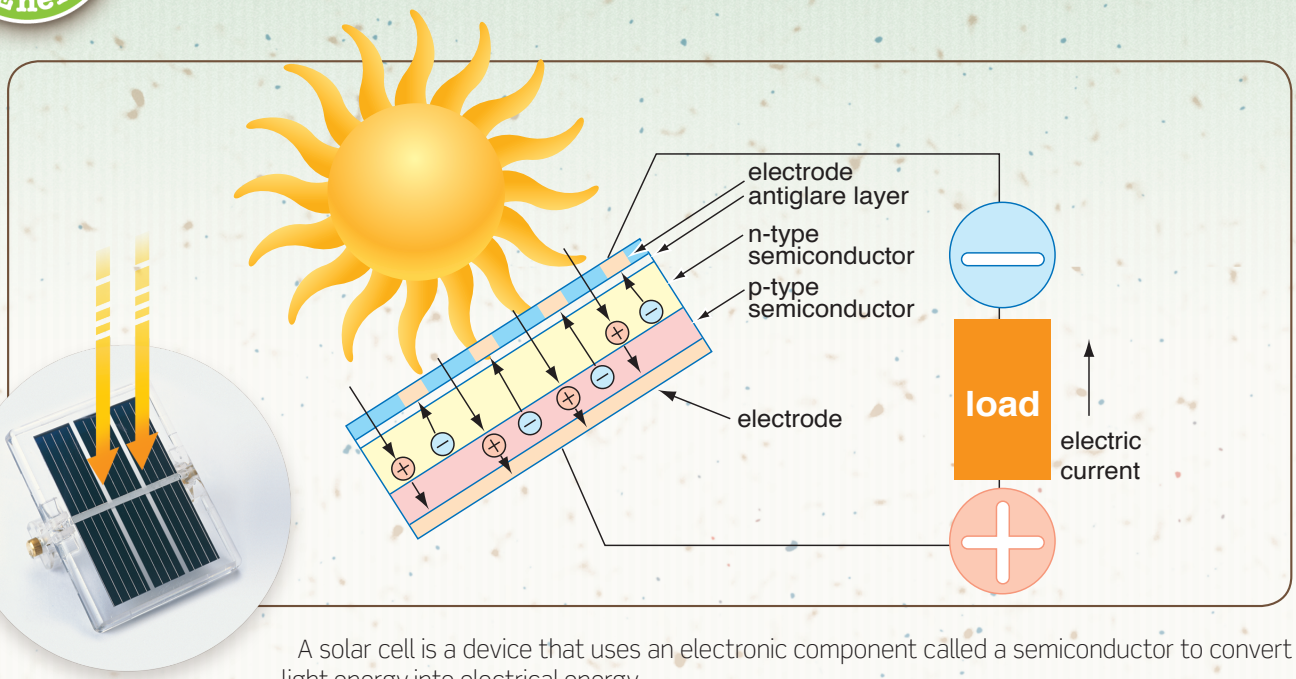

A solar cell is a device that uses an electronic component called a semiconductor to convert light energy into electrical energy.

In a solar cell, electrons in the semiconductor are excited into motion when they are exposed to light energy. The solar cell is designed to make the electrons flow in a specific direction, creating a negative pole on the side where there are more electrons and a positive pole on the side where there are fewer electrons, or more "empty holes" for electrons. This results in a voltage and an electric current.

The current and the voltage of a single standard solar cell are weak. It is common to strengthen them by wiring solar cells together in series or in parallel.

ADJUSTABLE SOLAR PANEL

The adjustable solar panel in this kit has several solar cells.

They are integrated into the black strips located under the protective layer of clear plastic. If you turn the panel over, you can see the individual cells very clearly. This solar panel is just the same as the big ones that you can see on the roofs of some houses, except that it is smaller and produces less electricity.

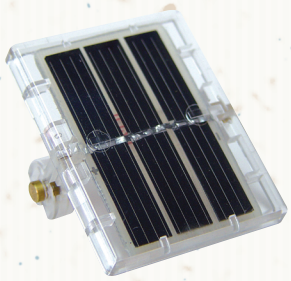

Solar Panel

Each of the solar panel's two brackets has a round metal conductor to pass on the positive and negative current produced by the solar cells through the metal contacts on the solar cell holder.

REVERSIBLE MOTOR/GENERATOR

The reversible motor can be activated by the electricity produced by the adjustable solar panel or a battery (size AA) mounted in the battery holder.

The reversible generator can generate electricity using mechanical (turning) energy too. The motor spins at 2000 rpm (revolutions per minute). The geared transmission reduces the speed by a factor of 16.8, so the output motor axle spins at 119 rpm, but with more torque.

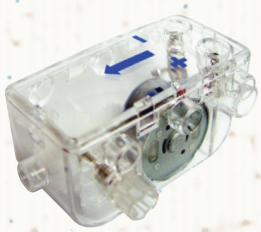

Reversible Motor/
Generator

TIPS FOR DESIGNING YOUR OWN SOLAR MODELS

1. Become familiar with the example models shown in this manual.
2. Brainstorm ideas for the mechanism you want to build and write them down.
3. Coordinate the power source and the mechanism on paper.
4. Determine the size of the mechanism.
5. Make every connection as accurately and securely as possible. Reduce the friction of connections as much as possible.
6. Experiment on the mechanism and make modifications to get proper movement. Then attach the motor.
7. Complete the project by reviewing the things you learned.

ACTIVATING THE REVERSIBLE MOTOR

You can experiment to activate the reversible motor as the pictures show.

1. Mount the adjustable solar panels on the battery holders.
2. Connect the battery holders and reversible motor with the wire connectors. Make sure you pay attention to the plus (+) and minus (-) symbols on the battery holders, the solar panels, and the motor when you attach the wire connectors. The red wire is the positive wire and the black is the negative.
3. Insert the motor axle into the reversible motor and mount a small sprocket on the axle.
4. Take your model into bright sunlight and orient the adjustable solar panel toward the sun to drive the reversible motor. You can clearly see the sprocket turning on the motor axle.

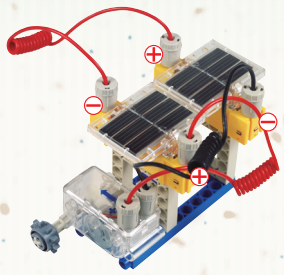

Fig. a. You can connect the two solar panels in series as shown here.

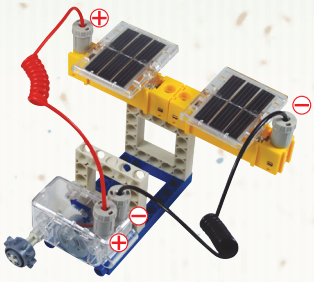

Fig. b. You can also connect the two solar panels in series as shown here.

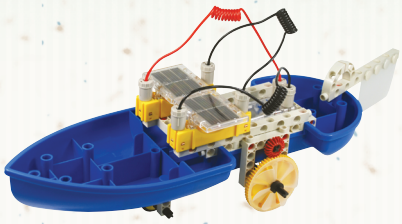

Fig. c. This picture shows the two solar panels installed on one of the models.

There is a diode inside the red battery charger.

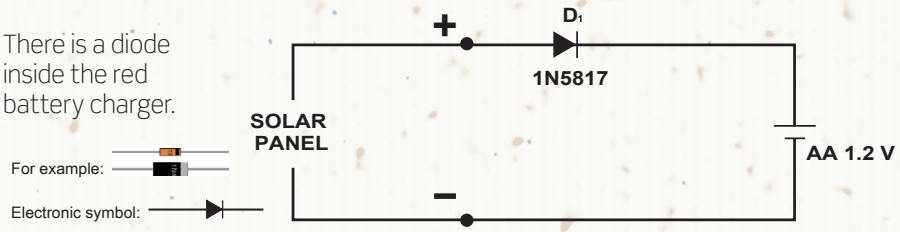

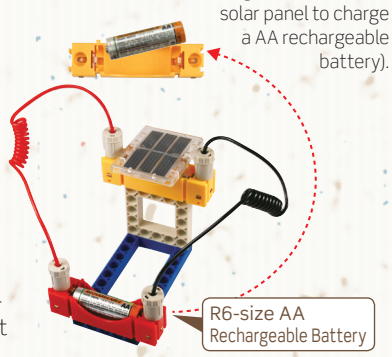

Fig. d. You can use a solar panel to charge a AA rechargeable battery).

A diode allows electric current to flow in only one direction. The electronic symbol for the diode (the arrow) indicates the direction in which the electric current can flow. Generally speaking, only if the electric current is forward current with a voltage of 0.7 V, will it be able to pass through the diode. However, when the electric current flows in the opposite direction (as in the case when the positive and negative poles of the solar panel or the wire connectors are reversed), it will be blocked, which is shown by the electronic symbol. When sunlight shines on the solar panels, electric current is produced and flows to the positive pole of the rechargeable battery, and slowly charges the battery. As the sunlight disappears, although the voltage the solar panel decreases, the diode prevents the stored electric current from flowing backward and draining out again.

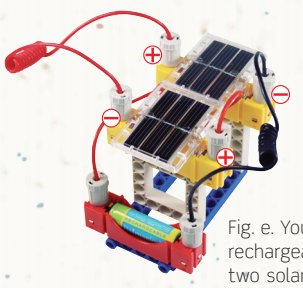

Fig. e. You can charge a AA rechargeable battery with two solar cells in series as shown here.

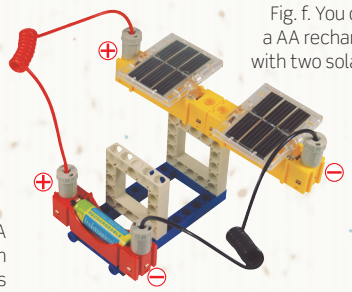

Fig. f. You can also charge a AA rechargeable battery with two solar cells in series as shown here.

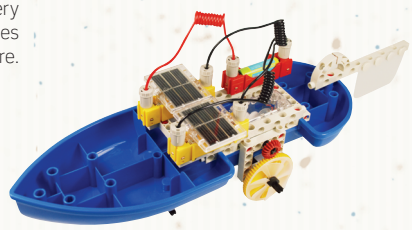

Fig. g. This picture shows the single-battery charger installed on one of the models.

OPERATING THE MOTOR WITH BATTERIES

When the sunlight is not strong enough, or you are playing indoors or at night, you can remove the solar panels from the battery holder and insert two AA batteries (1.5 V, sold separately) to power your models. (1.5 V + 1.5 V = 3 V)

It is possible to add more battery holders with solar panels (from another set) and more AA batteries (sold separately) in serial connection to increase the power. The solar panel and the battery can work together in this way.

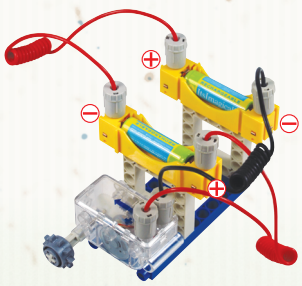

Fig. h. You can connect two fully charged AA batteries in series like this.

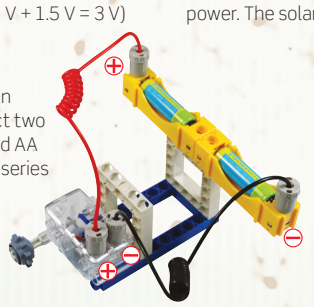

Fig. i. You can also connect two fully charged AA batteries in series like this.



Fig. j. This picture shows the model powered by two AA batteries instead of solar panels.

SPUR AND BEVEL GEARS

The gear set contains both spur and bevel gears. This kit contains "spur gears," which mesh in the same plane and regulate the speed or the turning direction of the shafts, and "bevel gears" (the beveled edges of the gears) which mesh together at right angles to the initial turning plane of the gears and shafts to change the plane of rotation.

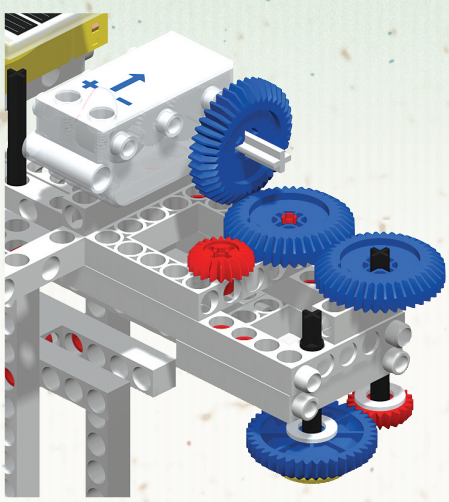

Gear Experiments

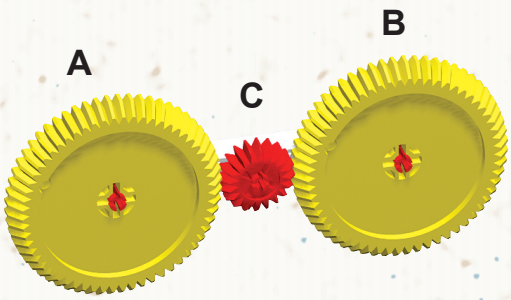

1. Try assembling a red 20-tooth gear so that it meshes with two yellow 60-tooth gears as shown. Turn gear A. Does gear B turn faster, slower, or at the same speed as gear A? If you turn gear A clockwise, which way does gear B turn?

Do you think it would make any difference to gears A or B if you put a larger gear in between them? Try it.

Did you notice any difference?

DID YOU KNOW?

Gear C is called an idler gear. It connects two other gears together but does not actually drive anything else by itself.



2. Connect four small gears in a row along the edge of the base grid or along a rod.

What do you notice about the direction in which they turn?

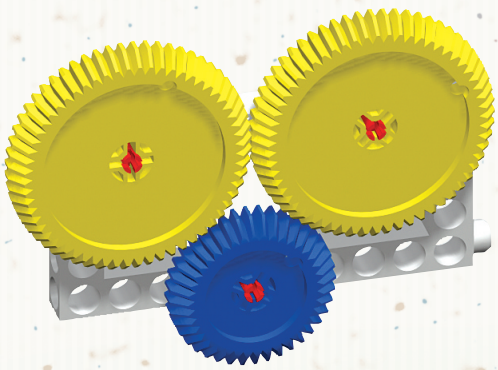

3. Assemble two yellow 60-tooth gears and a blue 40-tooth gear as shown.

Can you explain why the gears will not turn?

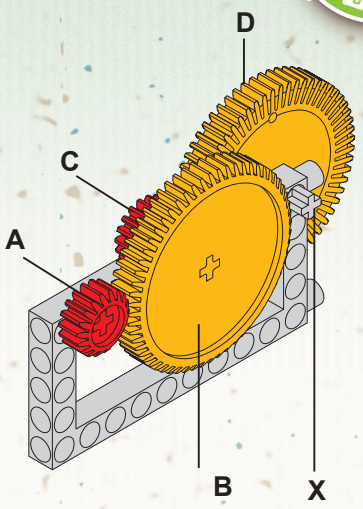

1. Use two red 20-tooth gears and two yellow 60-tooth gears to build the assembly shown here. You will need to use axles to put the gears on the frame. Gear B is on the same axle as gear C.

2. How many times do you have to turn the small gear A in order to make the second large gear D turn once?

The small gear A turning the large gear B yields a 3-to-1 gear ratio. The second small gear C is directly driven by the axle attached to gear B, and it produces another 3-to-1 gear ratio with the second large gear D.

Did you find out that you had to turn the small gear A nine times to turn the second large gear D once?

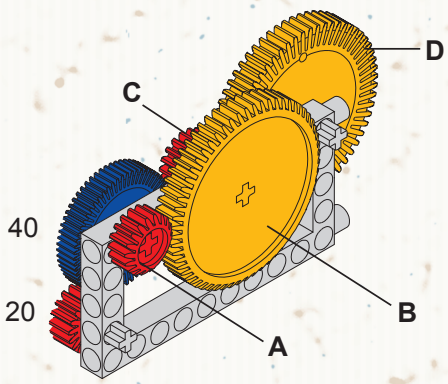

The overall gear ratio of the system is 9 to 1. (A gear ratio of 3 to 1 multiplied by another ratio of 3 to 1 yields a total gear ratio of 9 to 1).

3. Add a third red 20-tooth gear to the short drive axle at (x). Why does the system lock up?

4. Add a blue 40-tooth and a red 20-tooth gear to the system as shown. Can you work out mathematically what the gear ratio of system would be? Count the number of turns. Were you right?

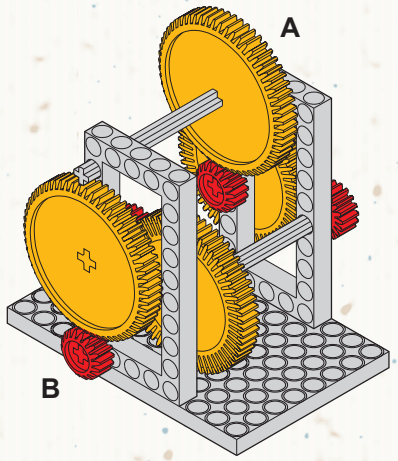

1. This gear box uses a combination of red 20-tooth gears and yellow 60-tooth gears. There are four pairs of red 20-tooth and yellow 60-tooth gears. Each pair produces a gear ratio of 3 to 1.

The overall gear ratio would then be

3 x 3 x 3 x 3 = 81.

If gear B is turned 81 times then gear A would turn once.

2. If gear A could be turned once then gear B would turn 81 times! Can you add another pair of gears to make a ratio of 243 to 1?

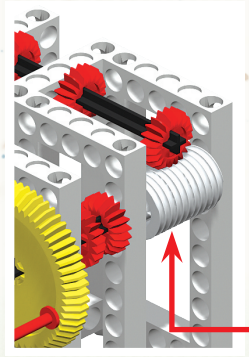

WORM GEARS

The gears in this kit can combine in yet another way. A worm gear and gear wheel are combined together as a worm gearbox. As the worm gear rotates once, the gear wheel turns only a one-tooth distance. Take the 40-tooth blue gear as an example, the gear ratio would reach 40:1 to achieve a huge speed reduction and torque increase. When friction is not considered, the speed reduction reaches 40 times, and the torque increases 40 times. In addition, the structure of the worm gearbox also has another characteristic: the transmission can only be conducted from the worm gear to the gear wheel, but cannot be conducted in reverse.

WORM GEAR

1. The power transmission in chain gear systems depends on chains instead of the direct meshing of gears. Chains must fit on the teeth of chain gears. Gears used with chains are called sprockets. The "working" diameters of the sprockets in this kit are about 10 mm (10-tooth), 20 mm (20-tooth) and 30 mm (30-tooth). Try to ensure that when connecting drive chains they are neither too tight nor too loose so that the motion of one is transmitted efficiently to the other. If the chain lengths do not exactly fit, opt for adding an extra chain segment: a chain that is a little loose will work better than one that is too tight. However, the chain has to be tight enough so that it does not fall off the sprockets. Chain gear systems can be found in normal bikes or escalators.

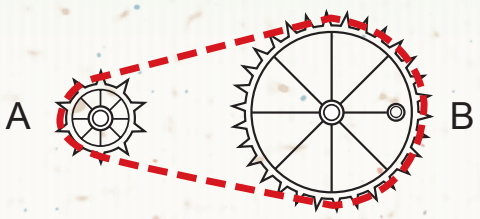

2. Connect a 10-tooth sprocket to a 30-tooth sprocket as shown.

3. Use a pencil point, or something similar, to turn sprocket B.
Which direction does sprocket A turn?
Would this be the same if A and B were two gears meshing?
How many times do you have to turn A for B to rotate once?
The gear ratio of these two sprockets would be __ to __ ?

4. Repeat the experiment for the two assemblies below and make a table of your results for all three.



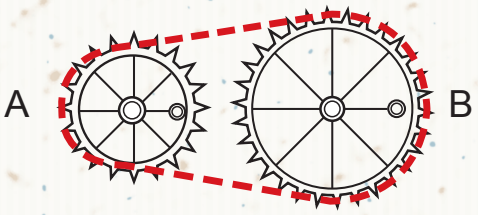

5. Try chaining a 10-tooth sprocket and two 30-tooth sprockets together as shown. Turn A clockwise.
What happens to B and C?
Do they turn in the same direction?
Do they turn at the same speed?

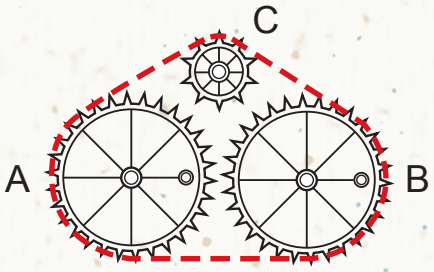

6. Now try to chain the 10-tooth sprocket C as shown.
Turn A clockwise. What happens to B and C?
Do they turn in the same direction?
Do they turn at the same speed?

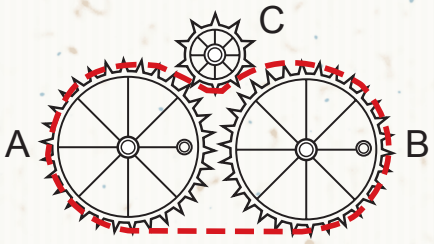

7. By connecting two sets of chain gears together three speeds can be obtained.
This system is widely used in the transmission on bicycles by adding a gear shift in between.

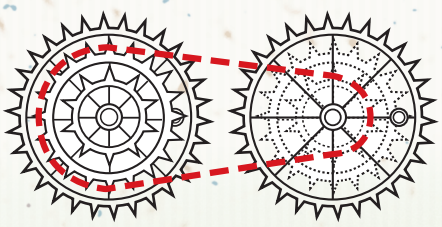

1. Both anchor pins and joint pins can be used to join rods and frames. (Fig. 1-1)
   But only a joint pin can allow a rod to rotate on a frame as shown. (Fig. 1-2)
2. Use a long axle to push the joint pin out of the rod. (Fig. 1-3)
3. Frames can be connected directly to each other end to end. (Fig. 2)
4. When attaching a gear or a wheel onto a frame with an axle, be sure to leave a gap of about 1 mm between the gear or the wheel and the frame. This will decrease the friction caused during operation so that the model will run more smoothly. (Fig. 3)
5. Make sure that when you connect the drive chains they are neither too tight nor too loose so that the motion of one sprocket is transmitted efficiently to the other. If the chain lengths do not exactly fit the distance between sprockets, making the chain a little looser will work better than making it too tight.
6. Chain links can be connected with each other, end to end, to make a drive chain of a desired length.
7. Make sure that you attach the chain links together with the smooth side always on the inside, so that the transmission can run efficiently and smoothly. (Fig. 4)
8. Use the end "A" of the part separator tool to pry off an anchor pin. (Fig. 5-1)
9. Use the end "B" of the part separator tool to remove the battery as Fig. 5-2 shows.
10. Axle locks are used to keep gears and axles from slipping. It's easy to put axle locks onto axles without removing gears or axles. (Fig. 6)
11. You can tuck the wires between rods, or wrap them around axles, to keep them out of the way. (Fig. 7)
12. Fit the large O ring into the grooved edge of a large pulley wheel to make a wheel and tire. (Fig. 8)

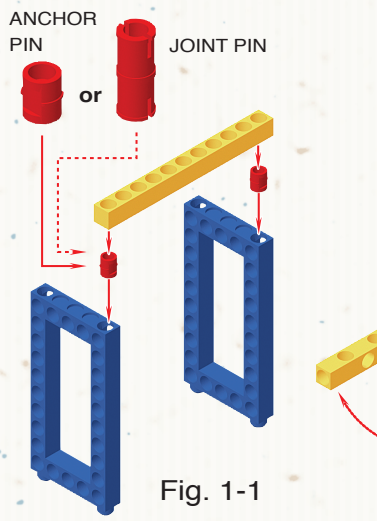

Fig. 1-1

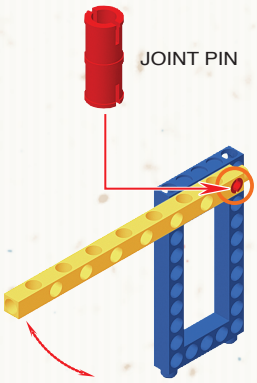

Fig. 1-2

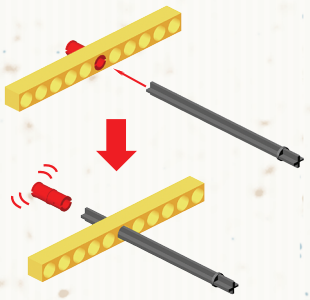
Fig. 1-3

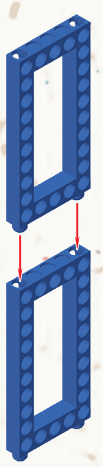
Fig. 2


Fig. 8

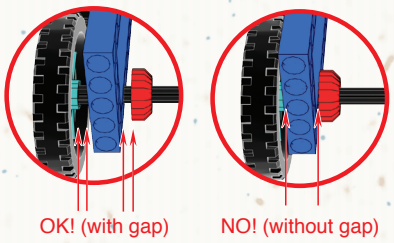

Fig. 3

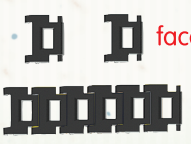

Fig. 4

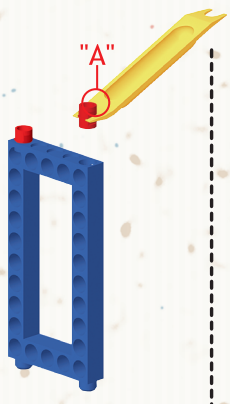

Fig. 5-1

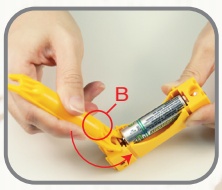

Fig. 5-2

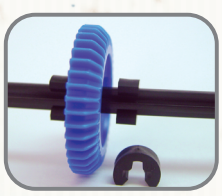
Fig. 6

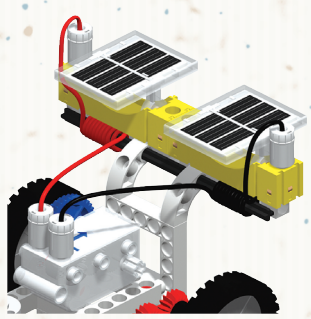
Fig. 7

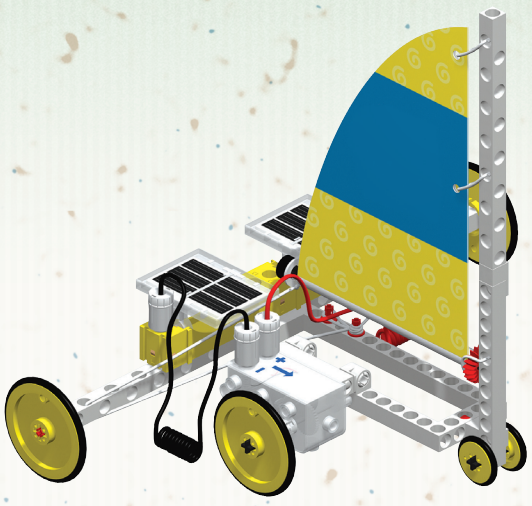

Model 1

Solar-wind Sail Car

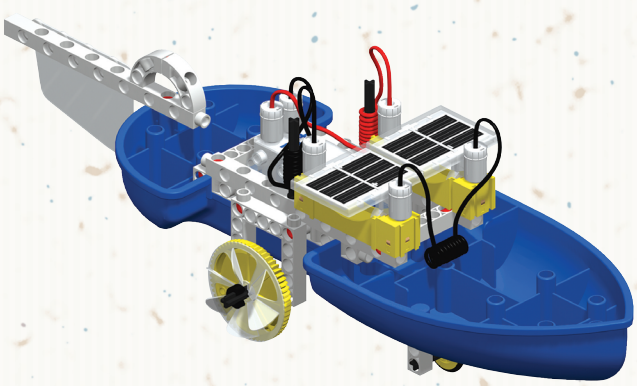

Model 2

Amphibious Vehicle

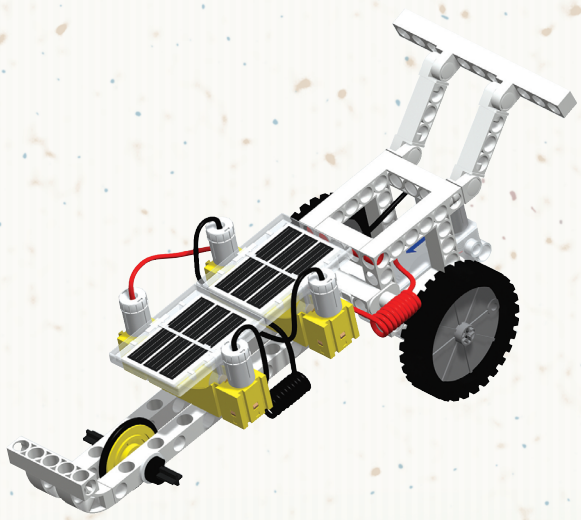

Model 3

Race Car

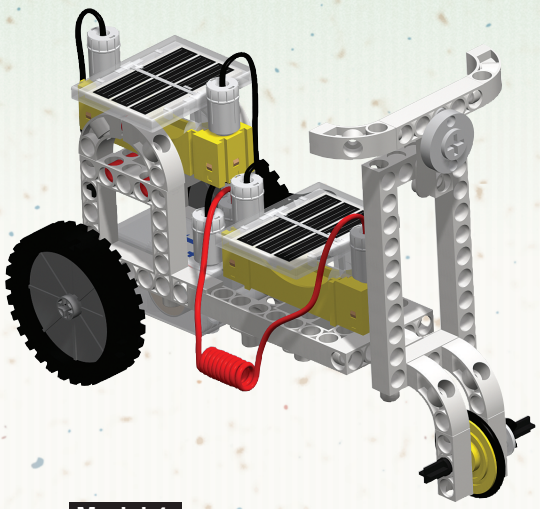

Model 4

Scooter

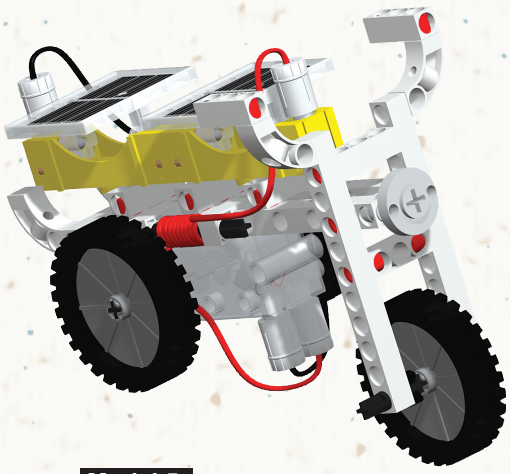

Model 5

Motorcycle

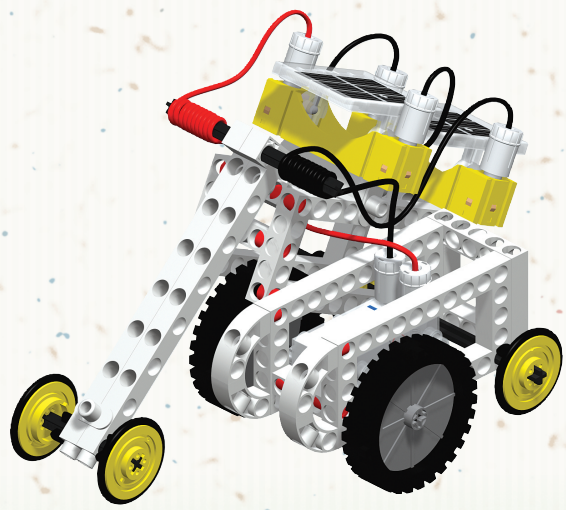

Model 6

Side-car Motorcycle

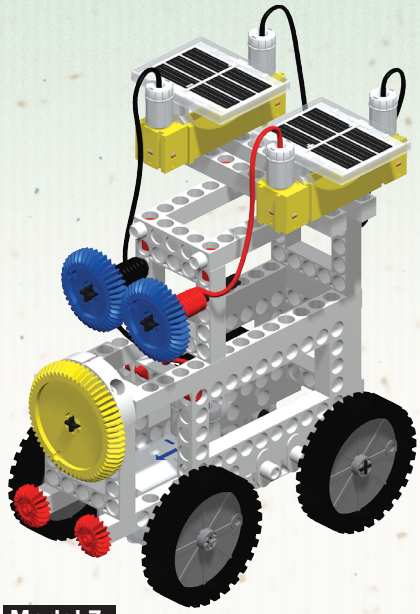

Model 7

Locomotive

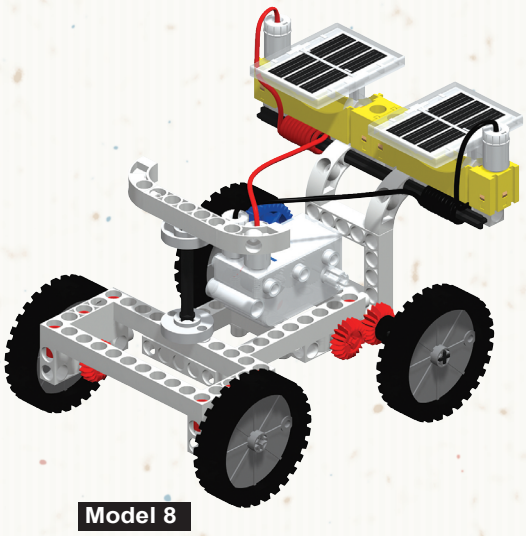

Model 8

Beach Buggy

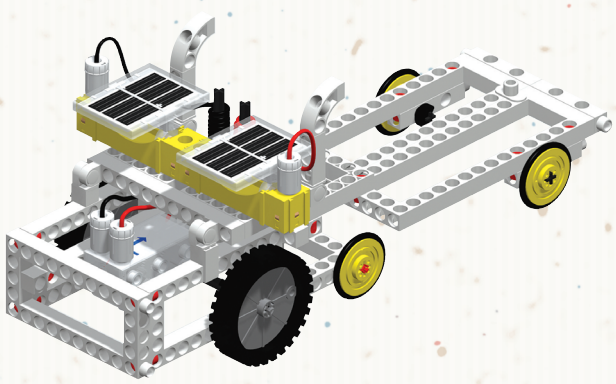

Model 9

Trailer Truck

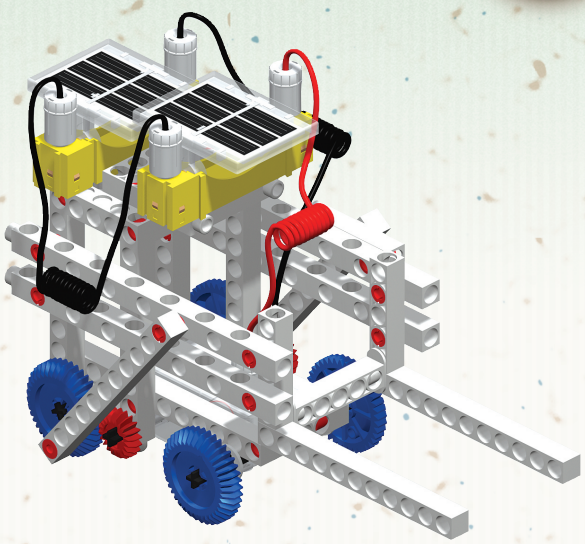

Model 10

Forklift

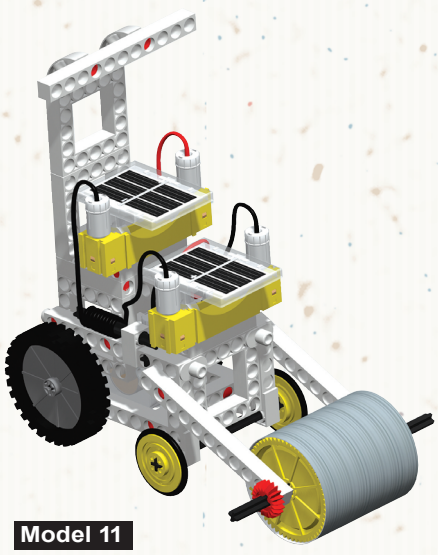

Model 11

Road Roller

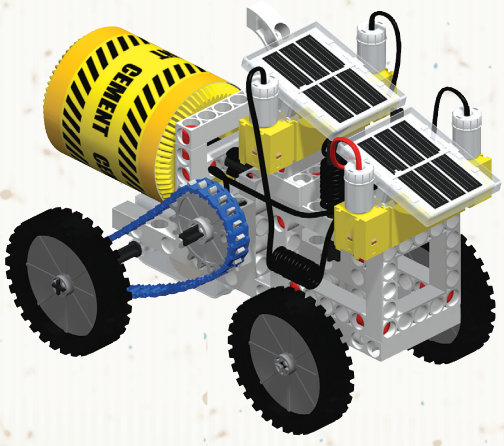

Model 12

Cement Mixer Truck

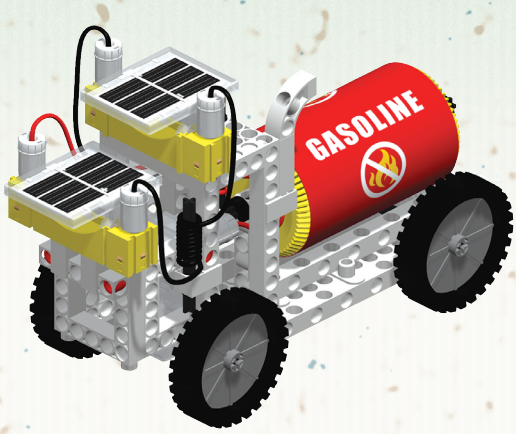

Model 13
Tanker Truck

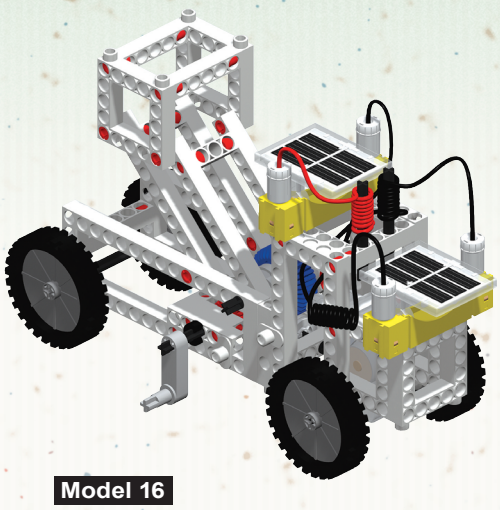

Model 16
Maintenance Car

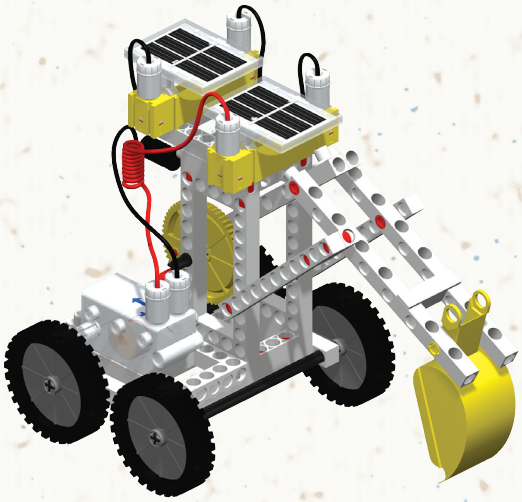

Model 14
Backhoe

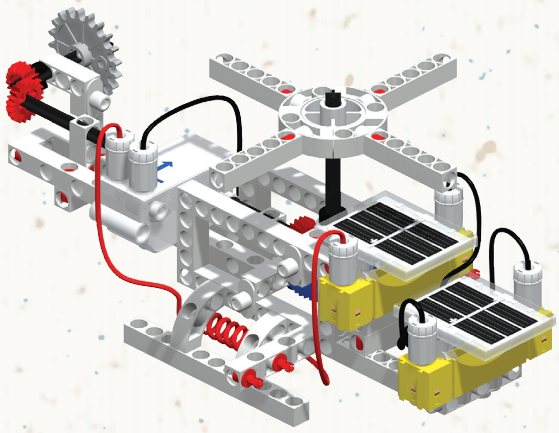

Model 17
Helicopter

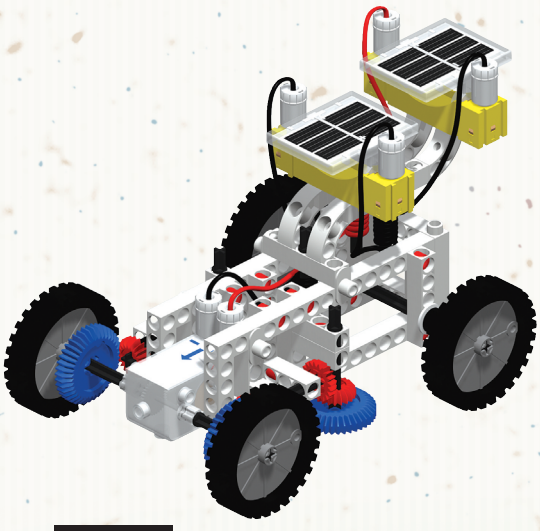

Model 15
Street Sweeper

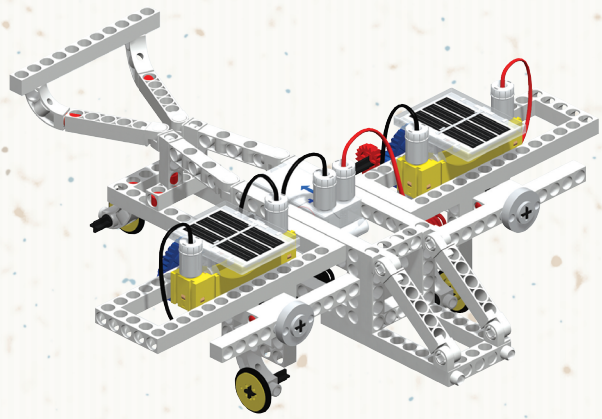

Model 18
Twin-prop Airplane

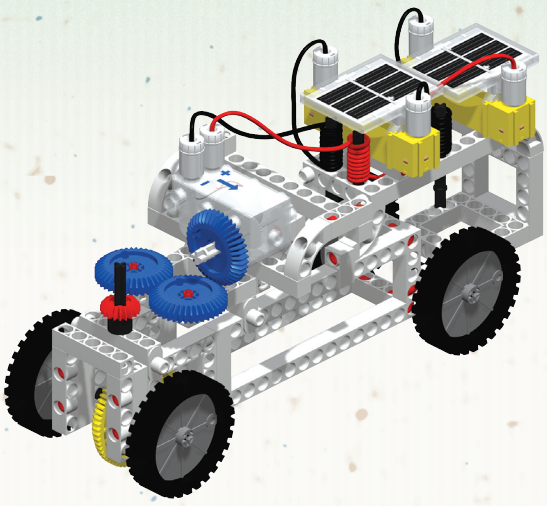

Model 19

Solar Car with Clutch

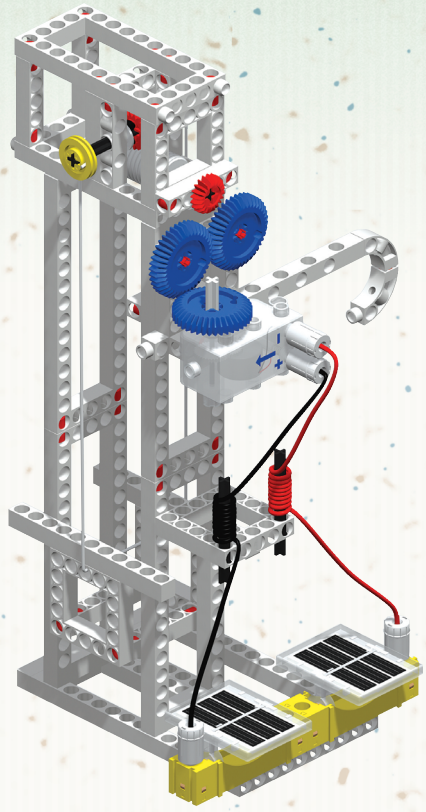

Model 21

Elevator

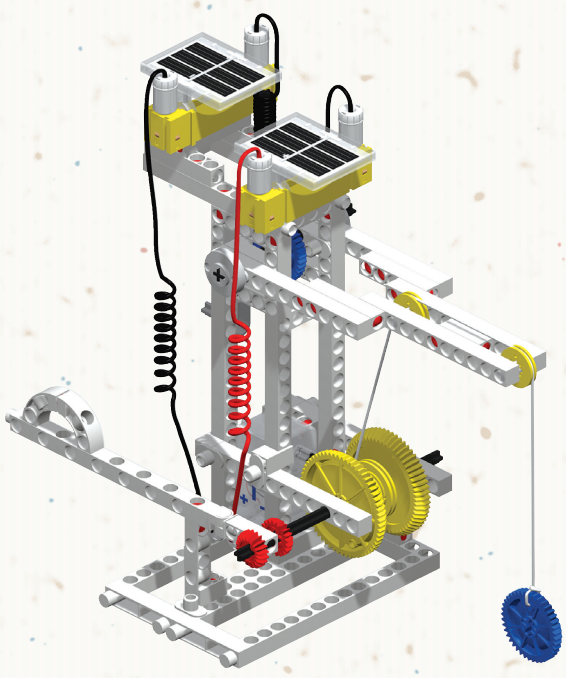

Model 20

Crane

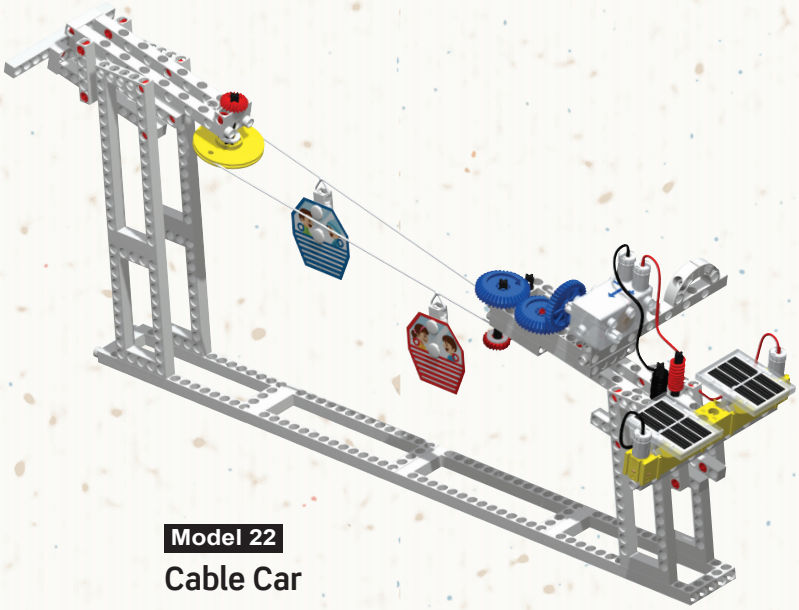

Model 22

Cable Car

SOLAR POWER PLUS | Solar-wind Sail Car

This sail car can drive with solar power or with wind power alone. Lift up the solar powered drive wheel off the ground to let the car cruise on wind alone.

PARTS NEEDED

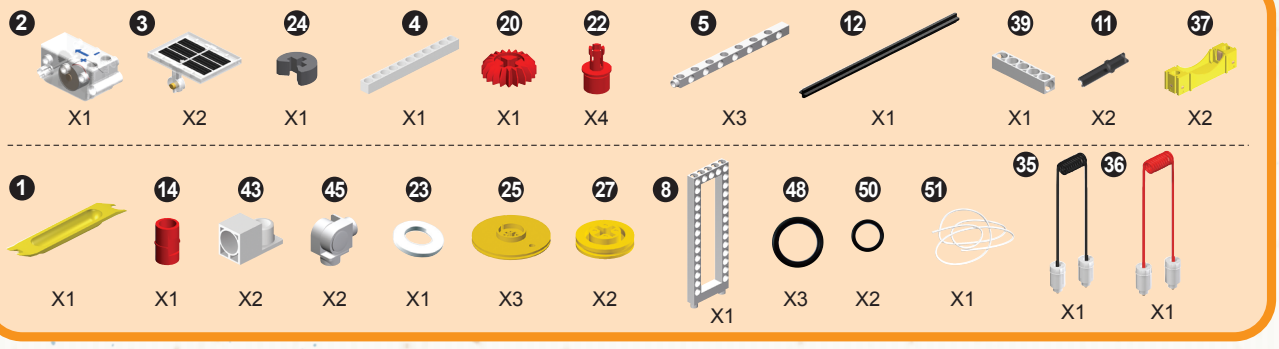

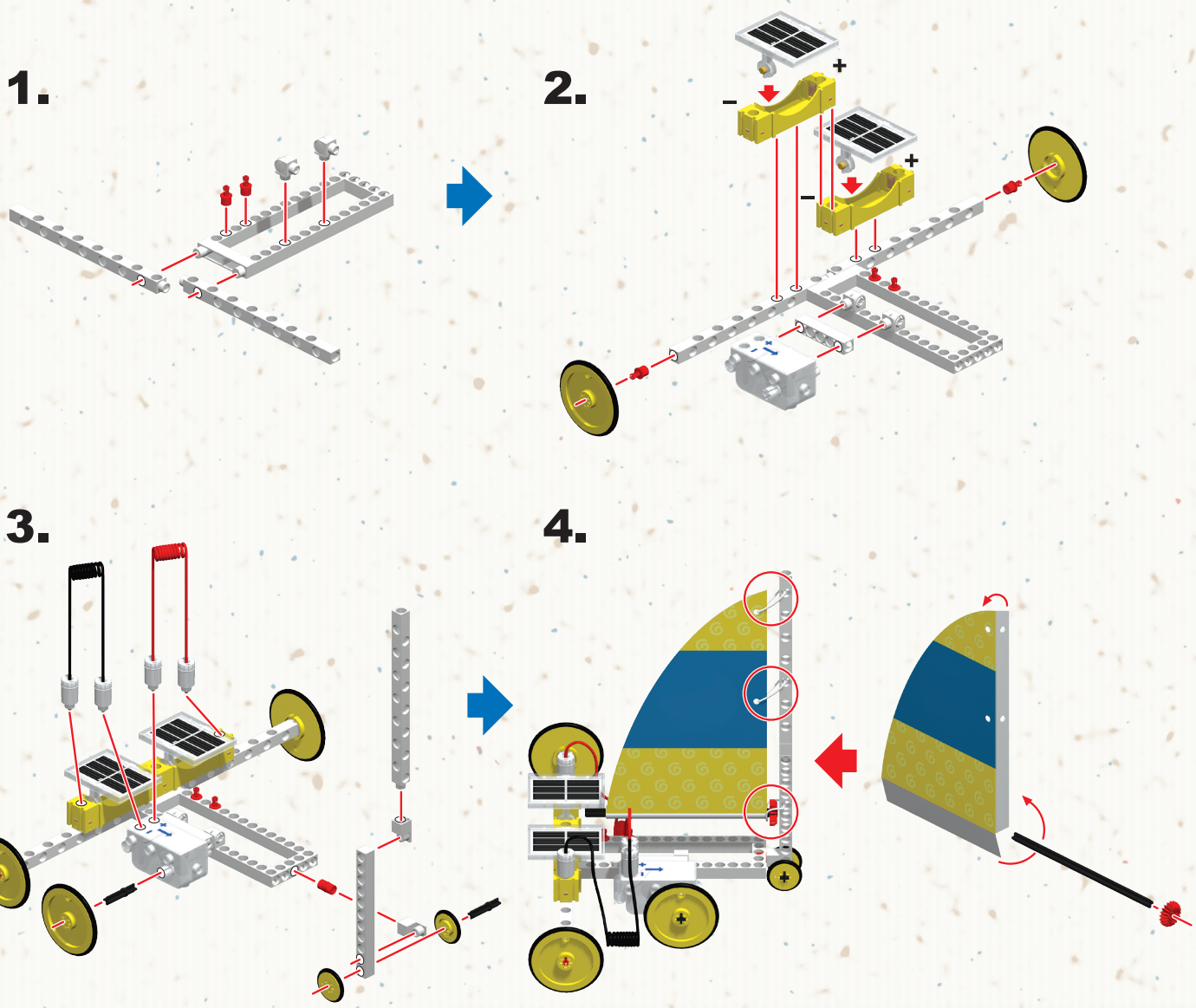

5.

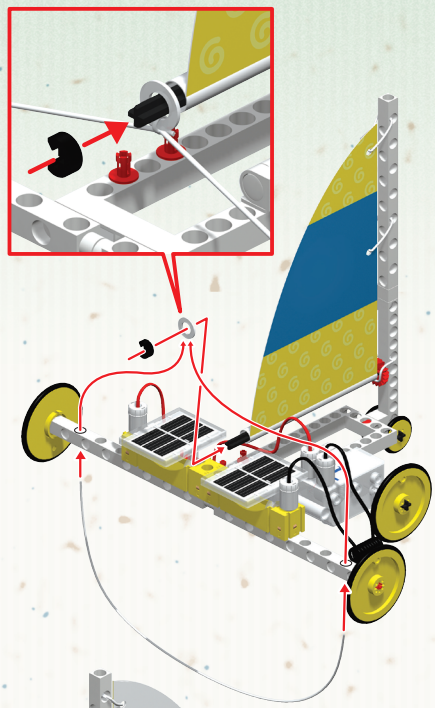

6.

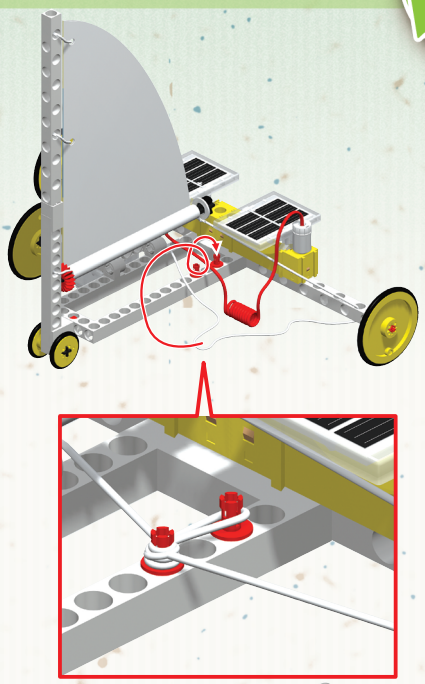

completed



TIPS FOR USE

When using the wind for sailing, the motor should be rotate up so that the wheel attached to it will leave the floor. (as Fig. A shows).

Also, the sail should be positioned at an angle of 90 degrees (Fig. B) or 45 degrees (Fig. C) relative to the car's center line, depending on the wind direction, so that your sail car can catch as much wind as possible.

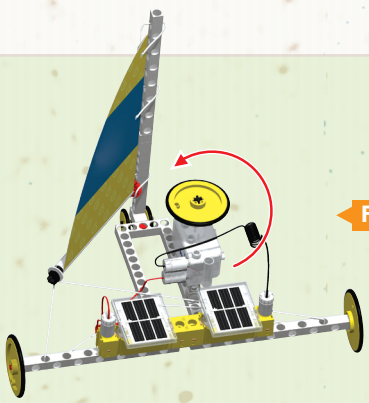

Fig. A

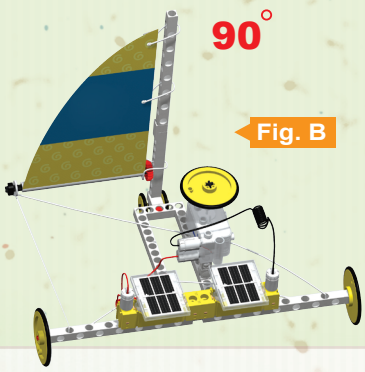

90°

Fig. B

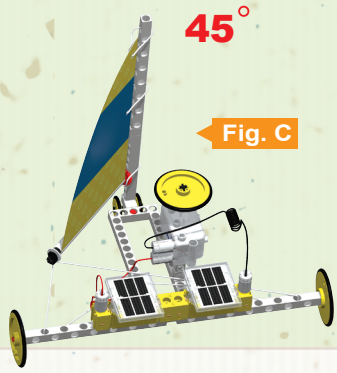

45°

Fig. C

SOLAR POWER PLUS | Amphibious Vehicle

This special vehicle can travel by land or sea. In the water, it uses clear plastic blades attached to the wheels like a paddle boat, and it has a rudder for steering.

PARTS NEEDED



1.

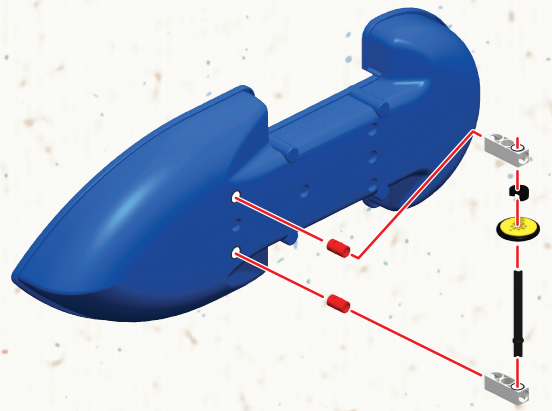

2.

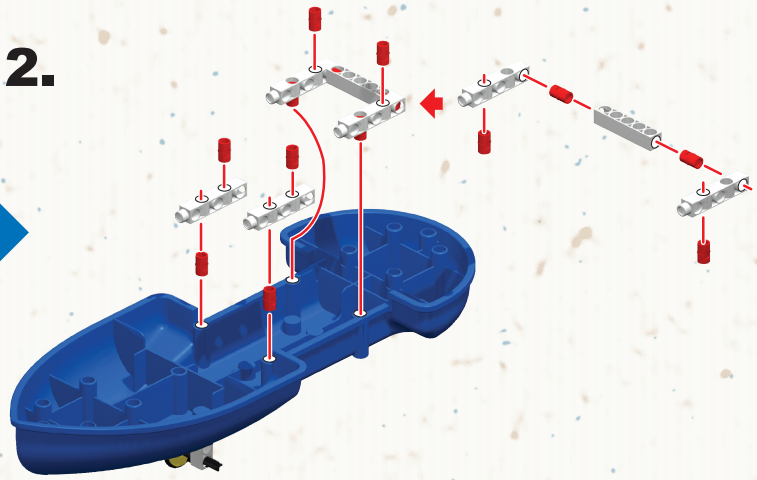

3.

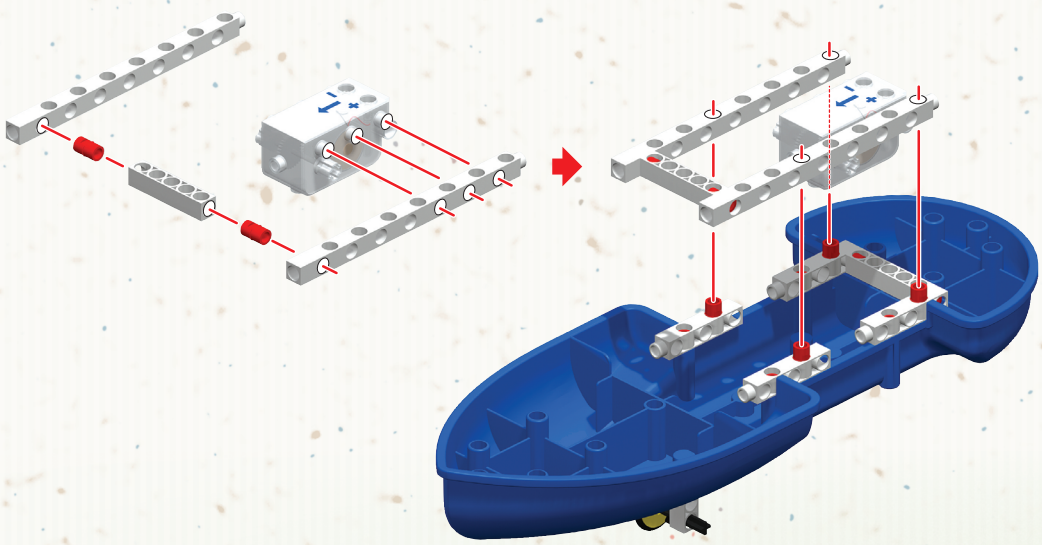

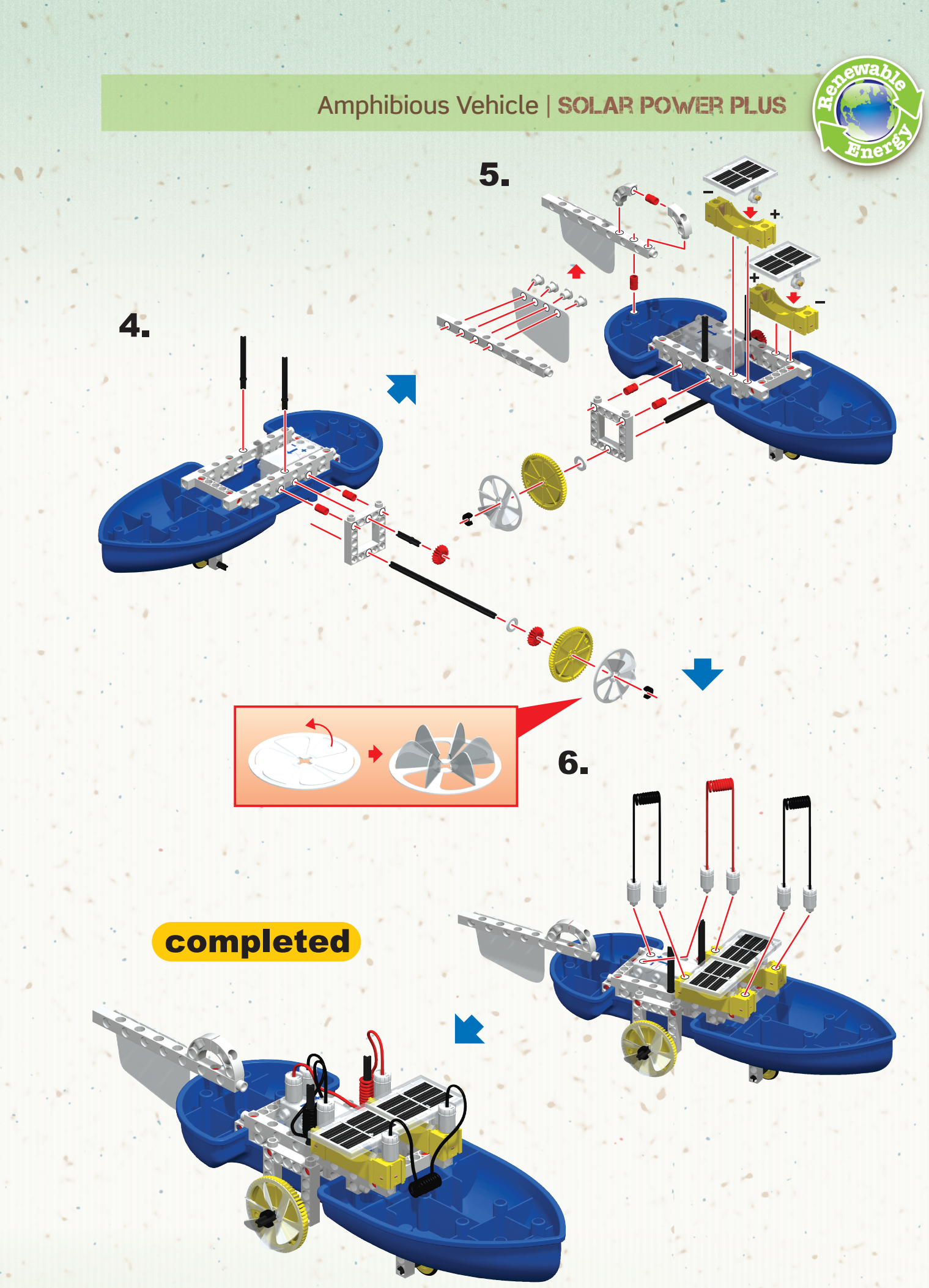
5.
4.
6.
completed

PARTS NEEDED

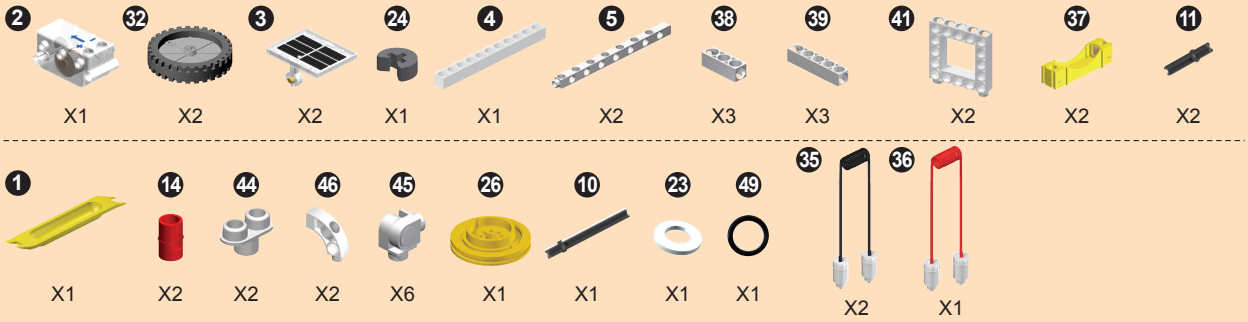

1.

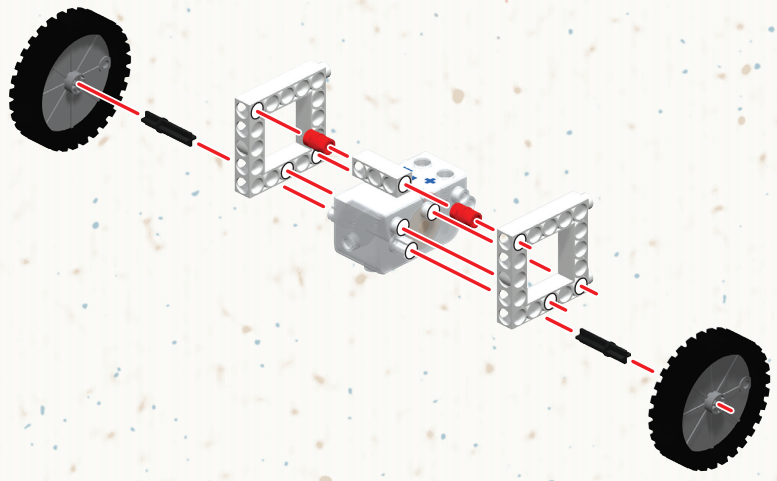

2.

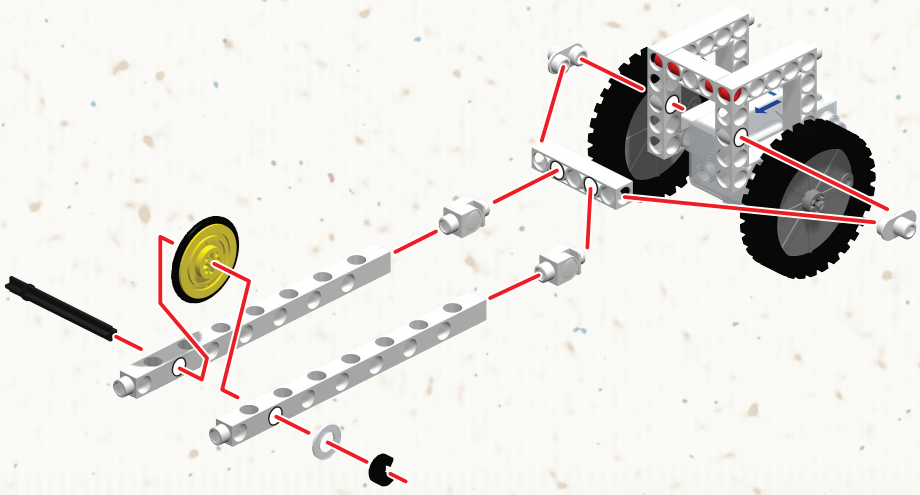

3.

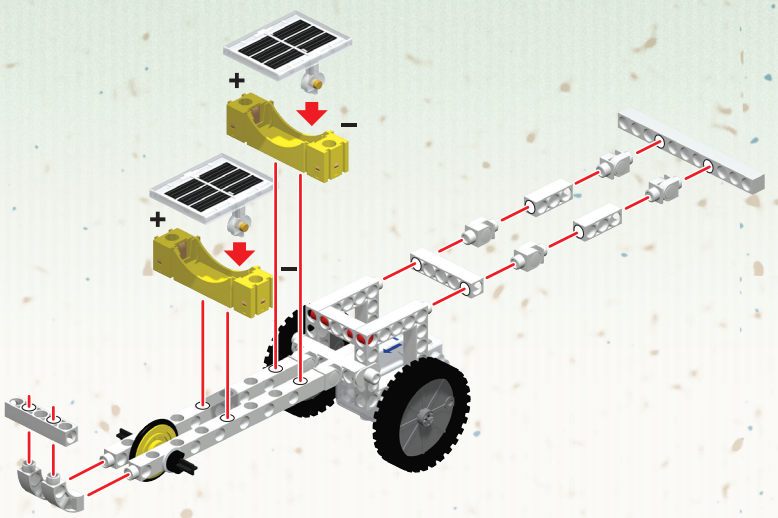

4.

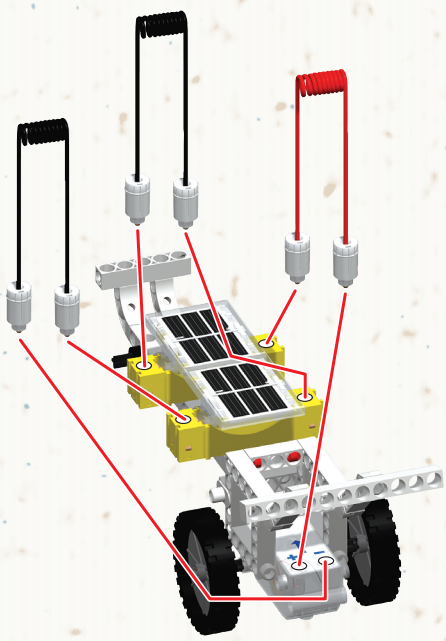

completed

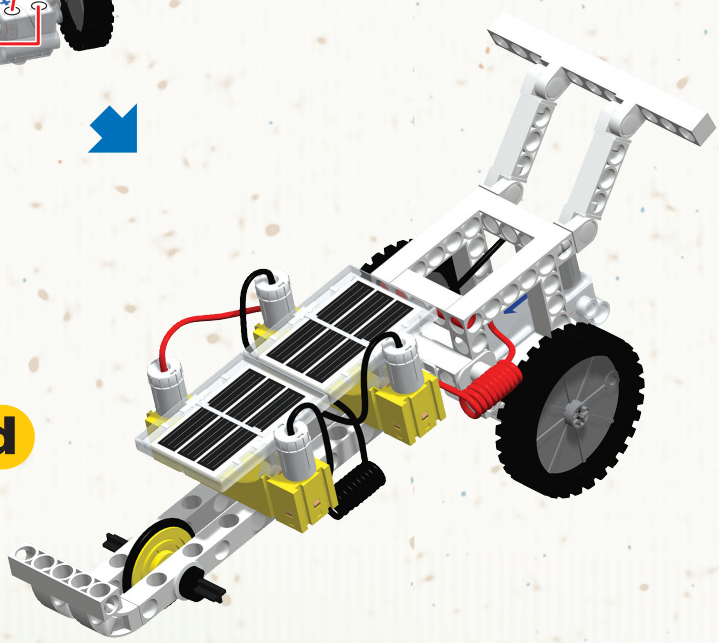

PARTS NEEDED

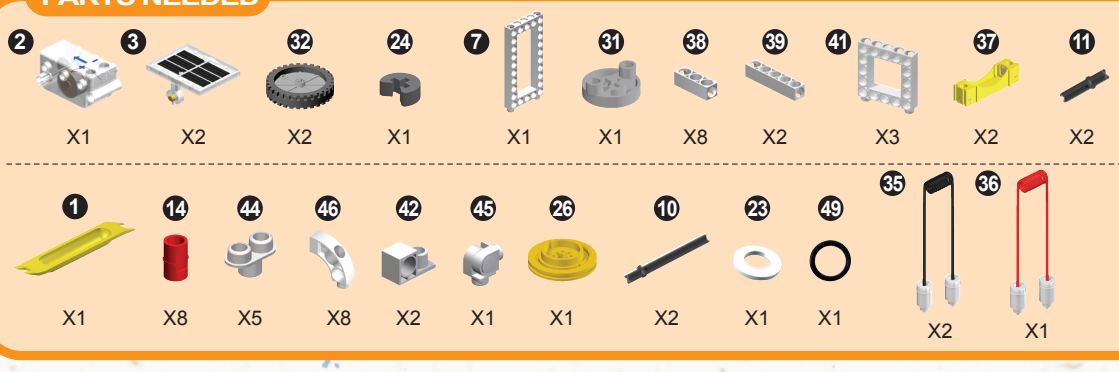

1.

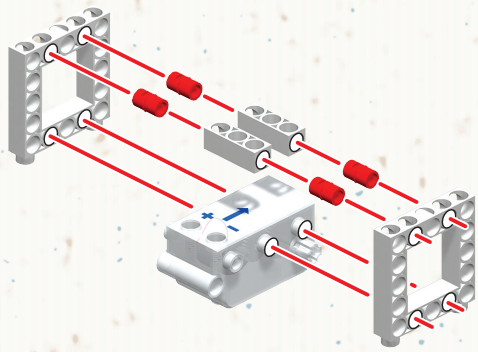

2.

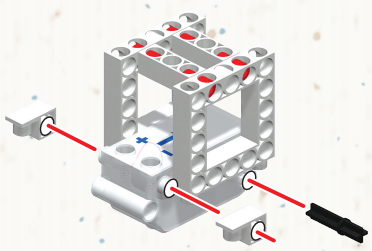

3.

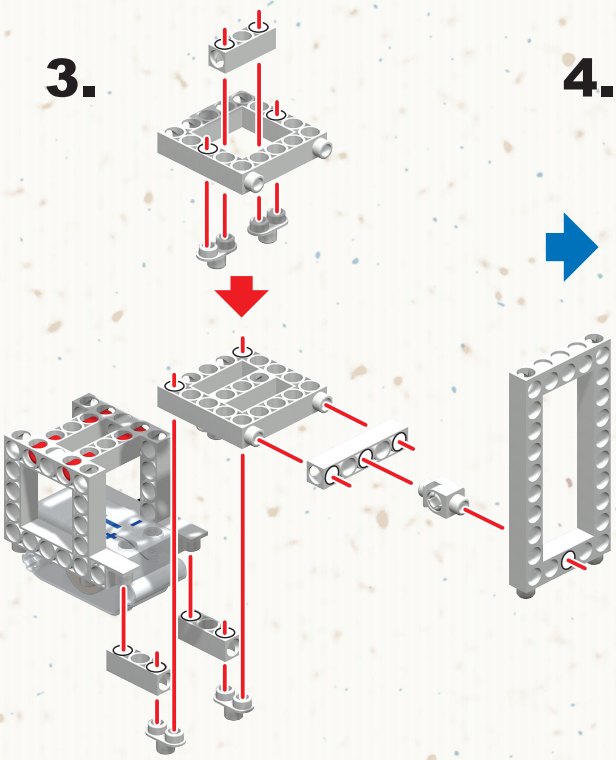

4.

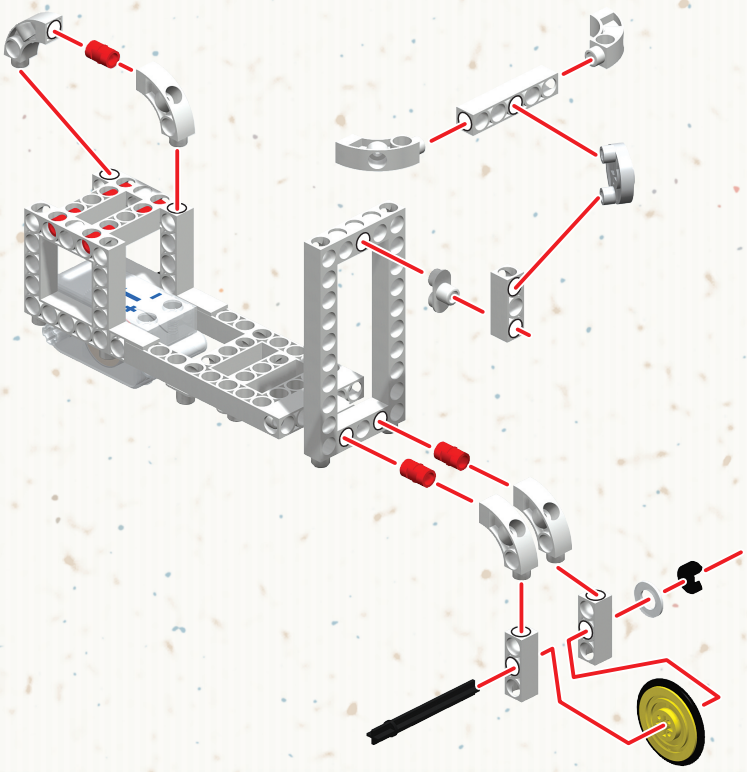

5.

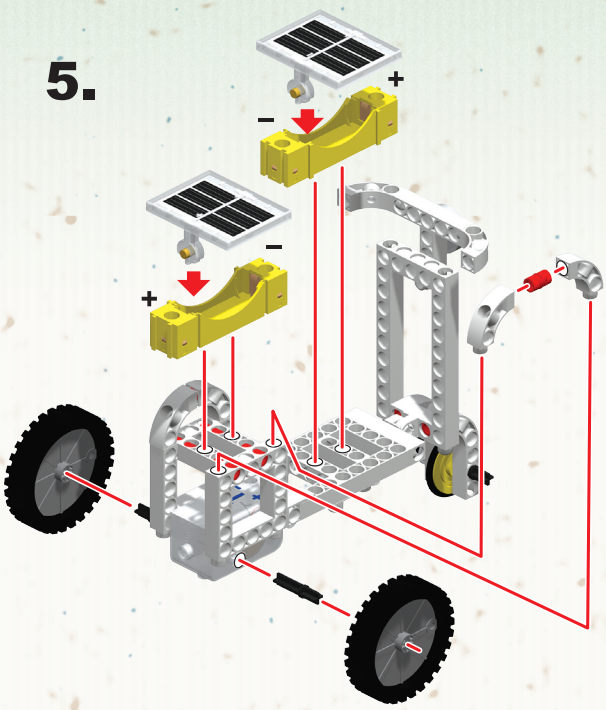

6.

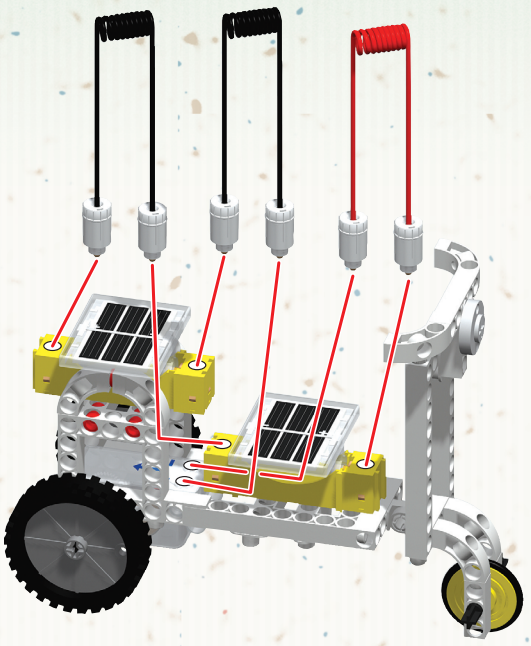

TIP

Reverse the wires connecting the solar panels to the motor as the picture shows to make your scooter move in the right direction.

7.

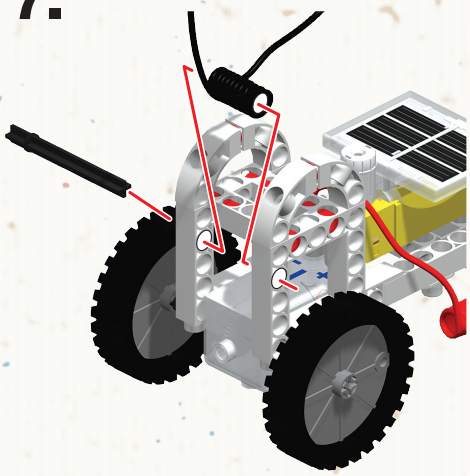

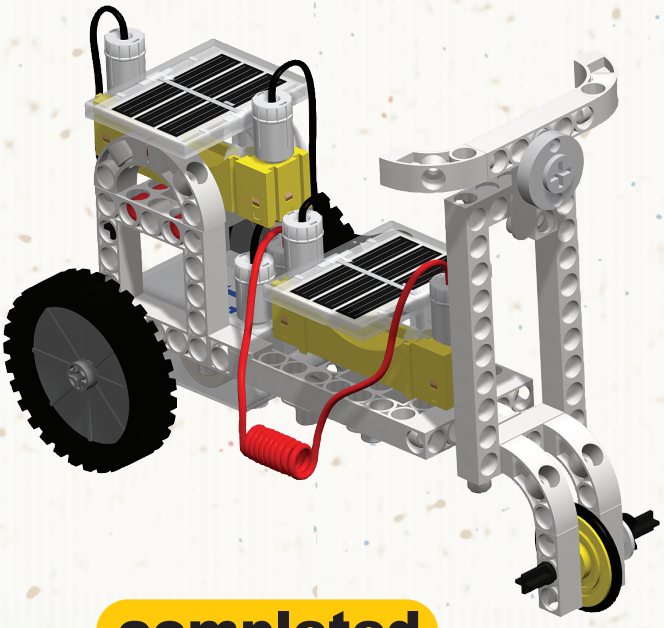

completed

PARTS NEEDED

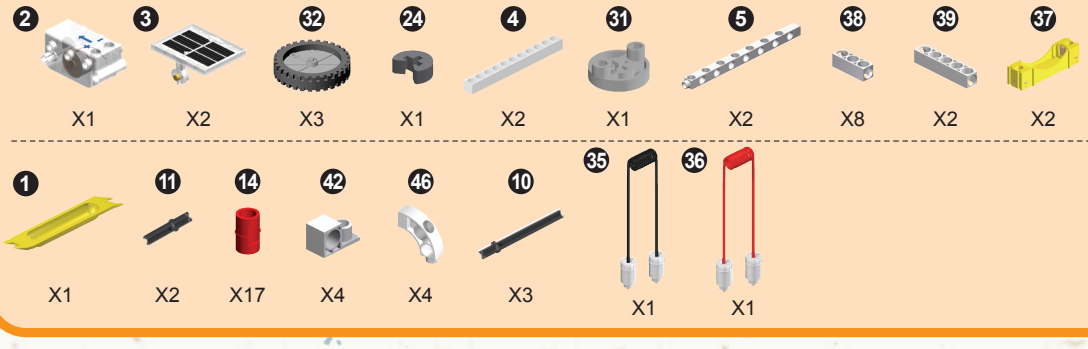

1.

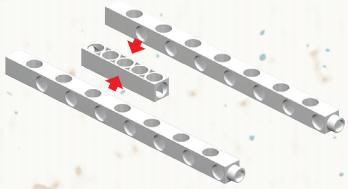

2.

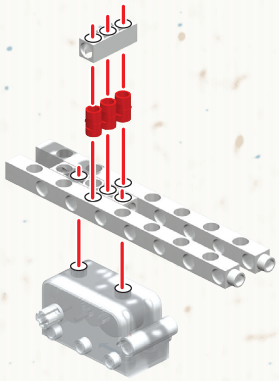

3.

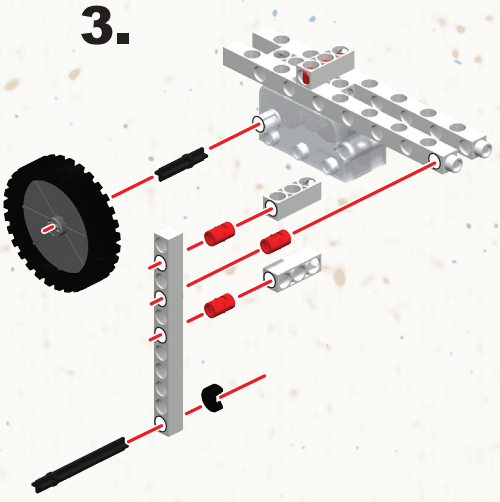

4.

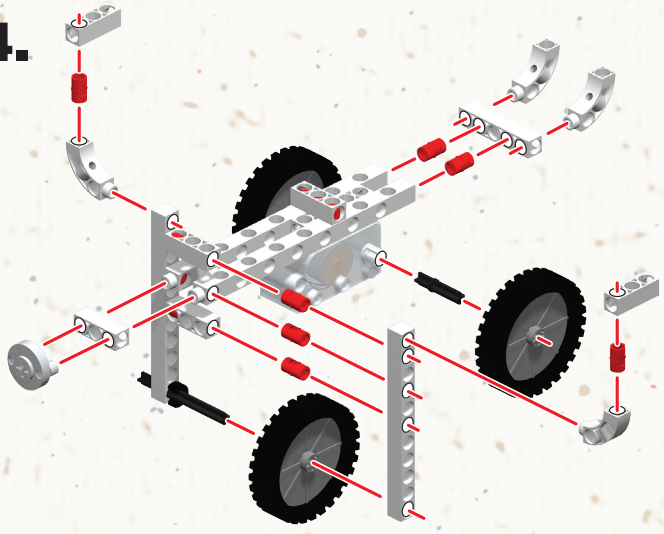

5.

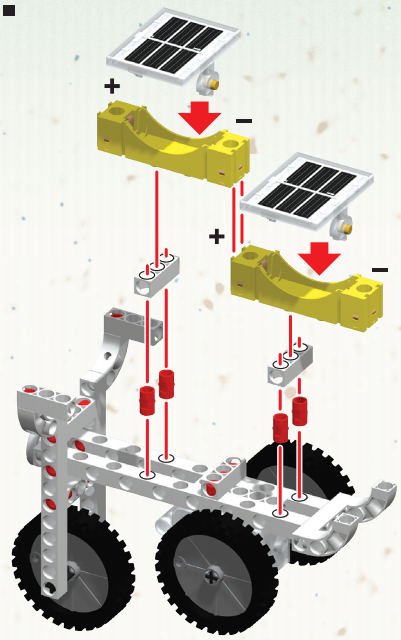

6.

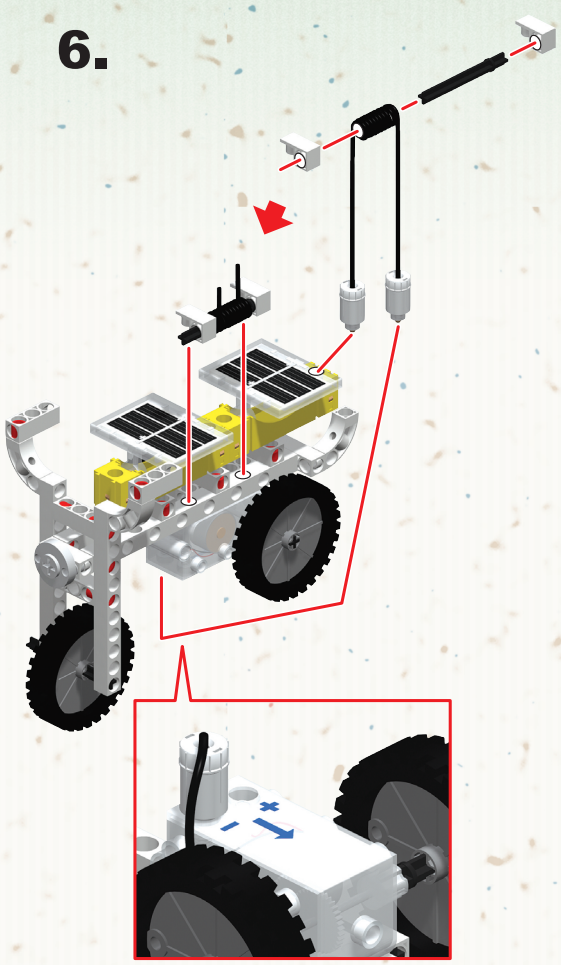

7.

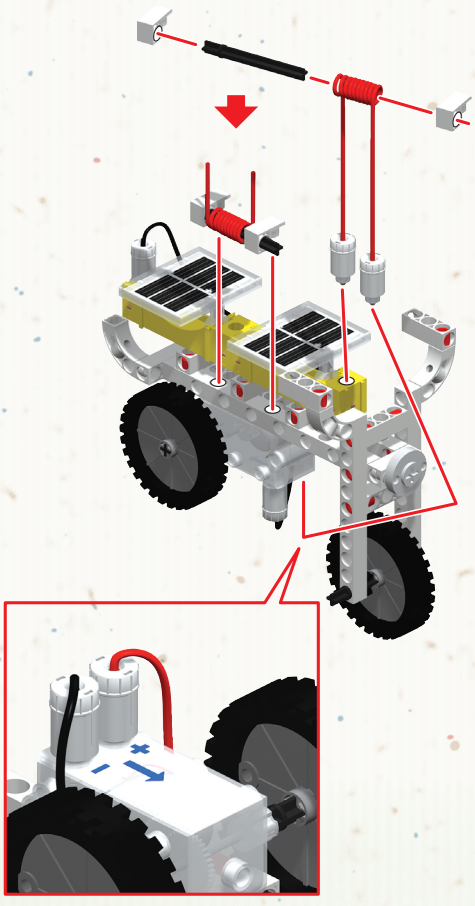

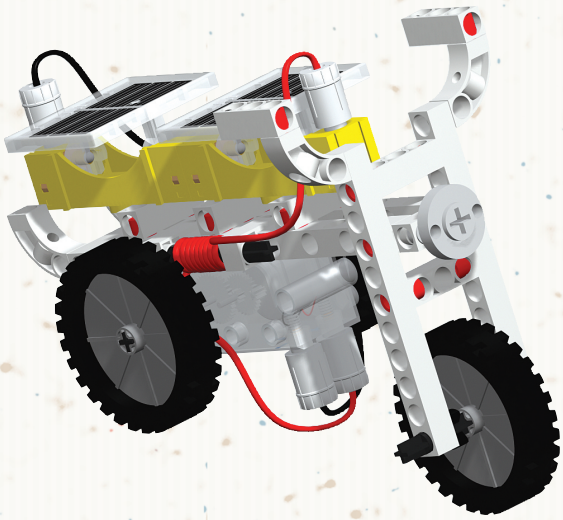

completed

PARTS NEEDED

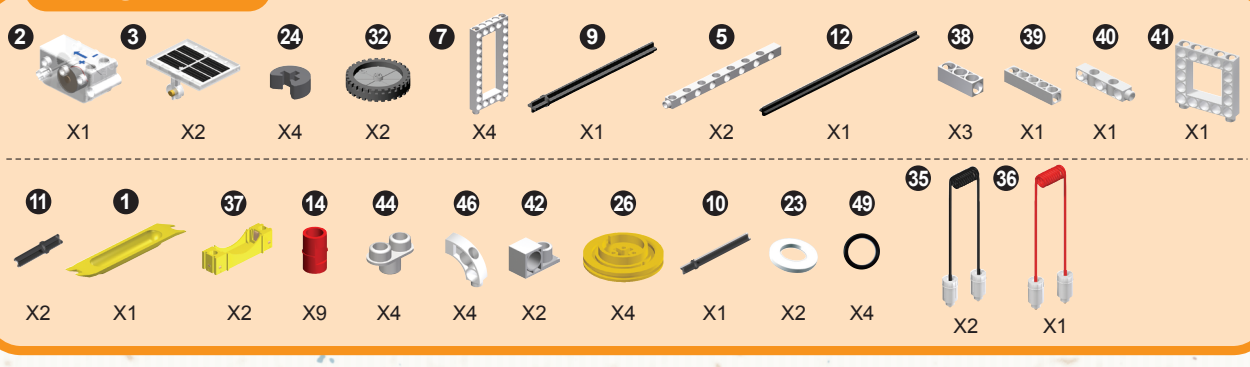

1.

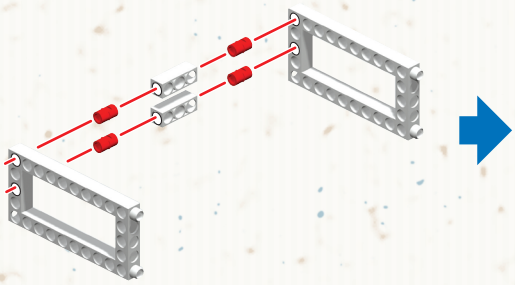

2.

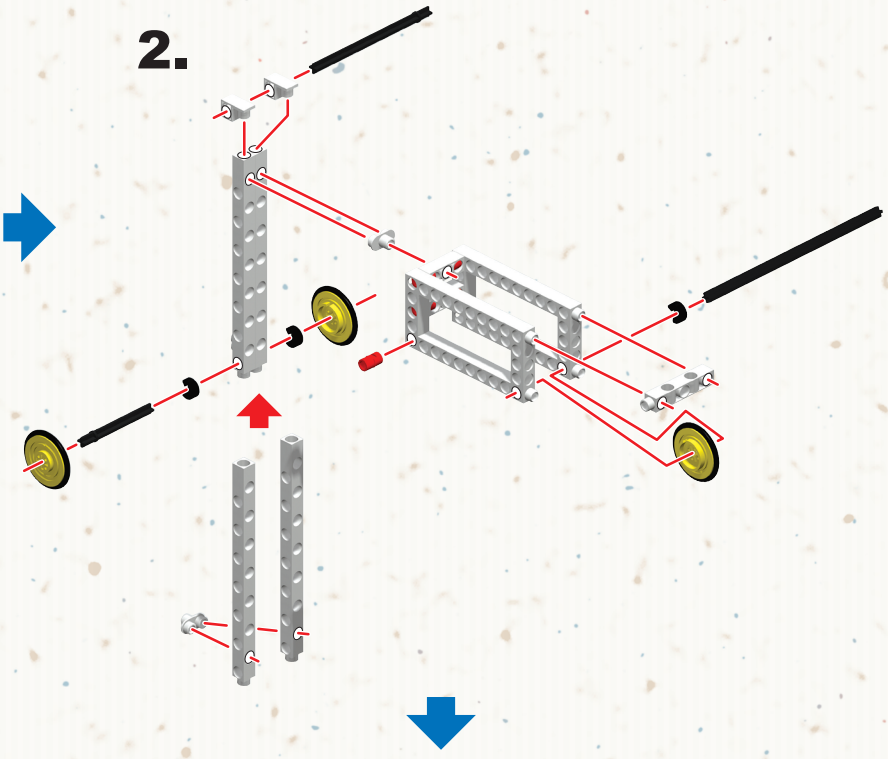

3.

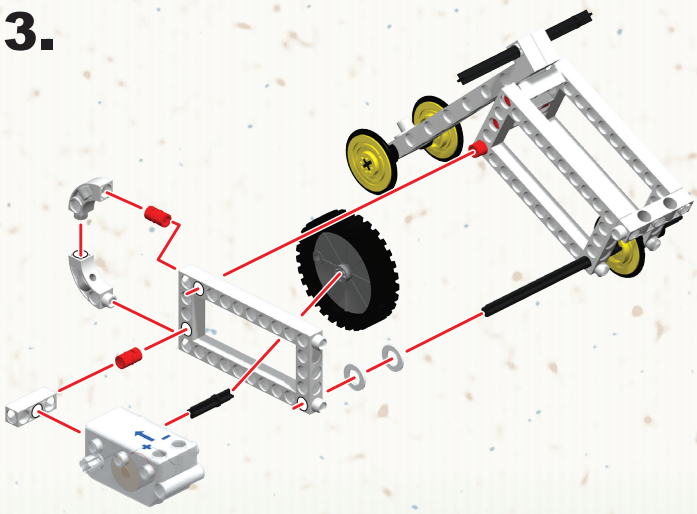

4.

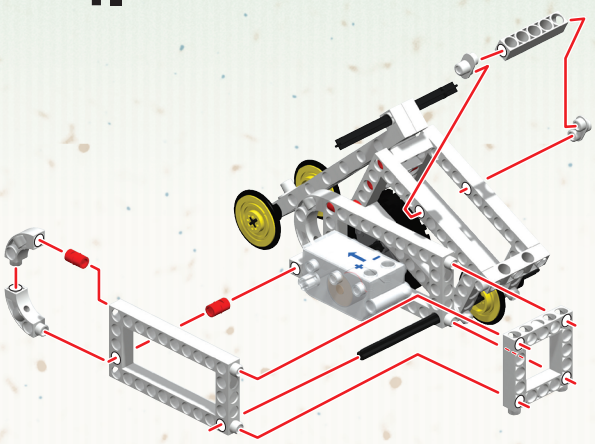

5.

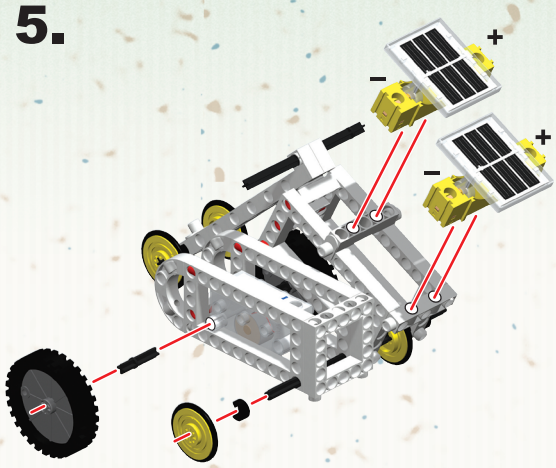

6.

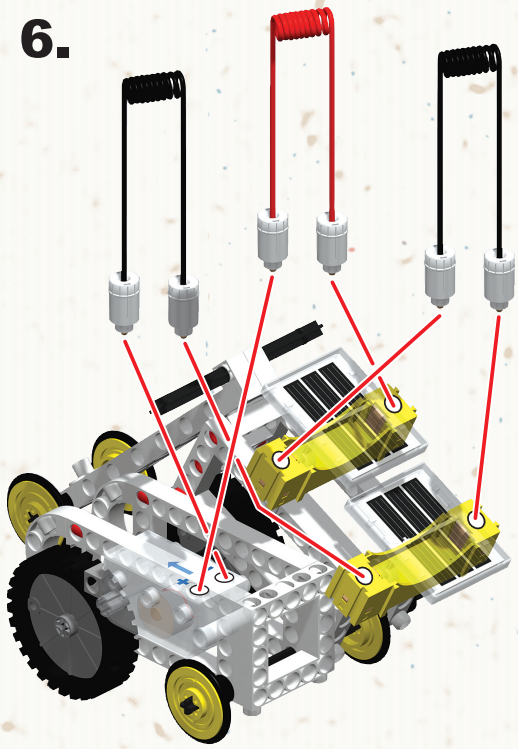

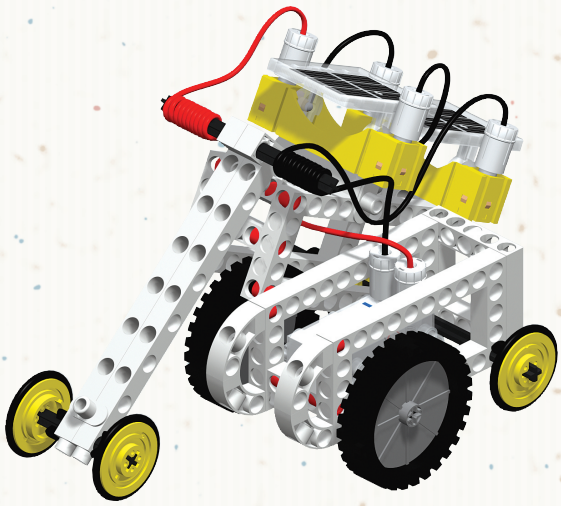

completed

PARTS NEEDED



1.

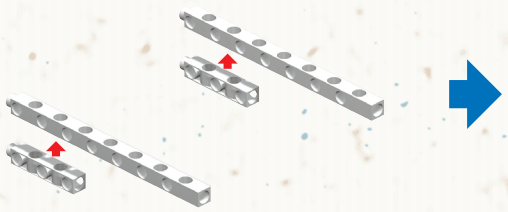

2.

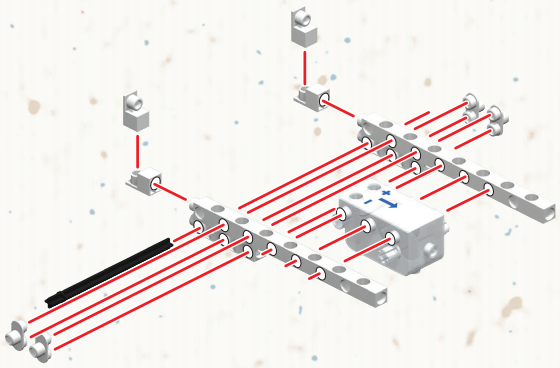

3.

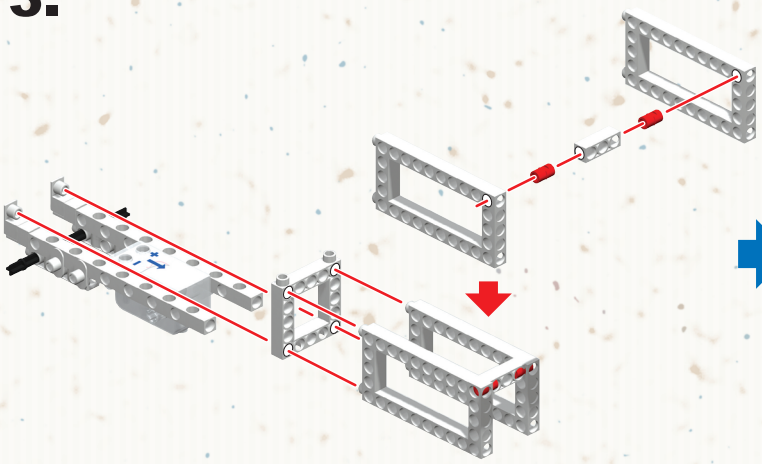

4.

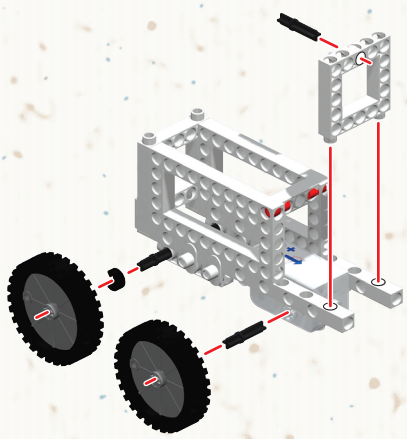

5.

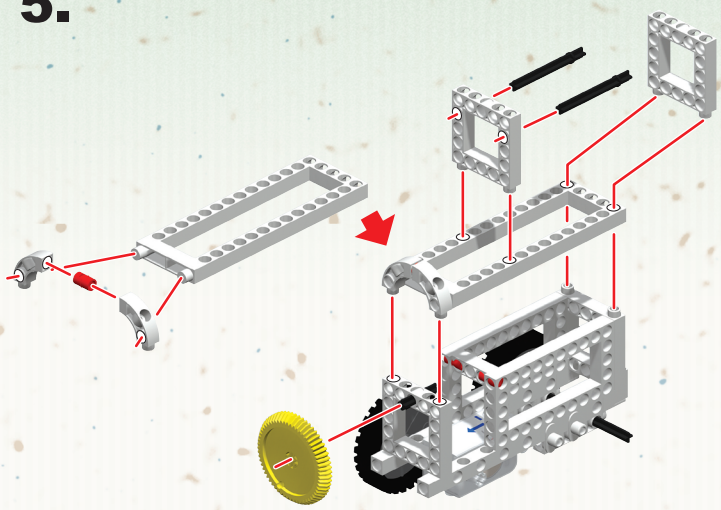

6.

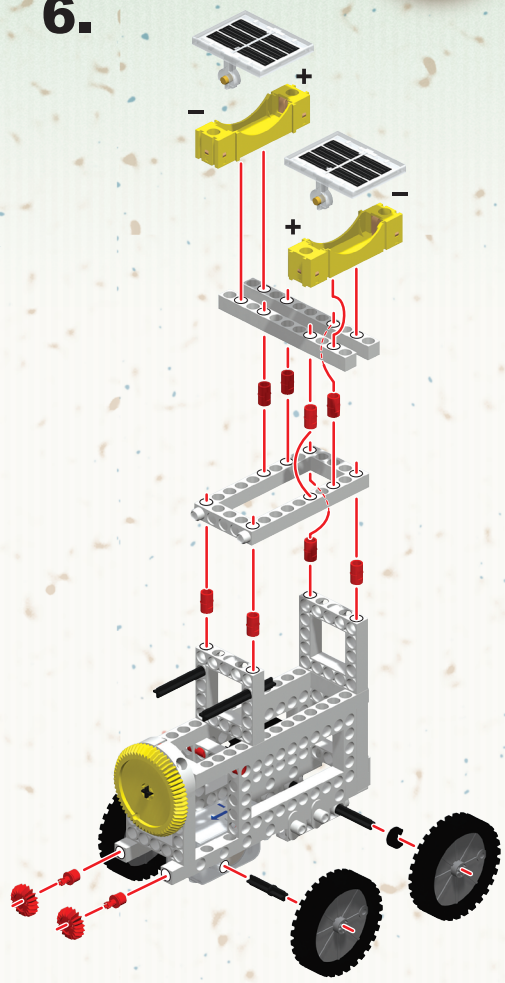

7.

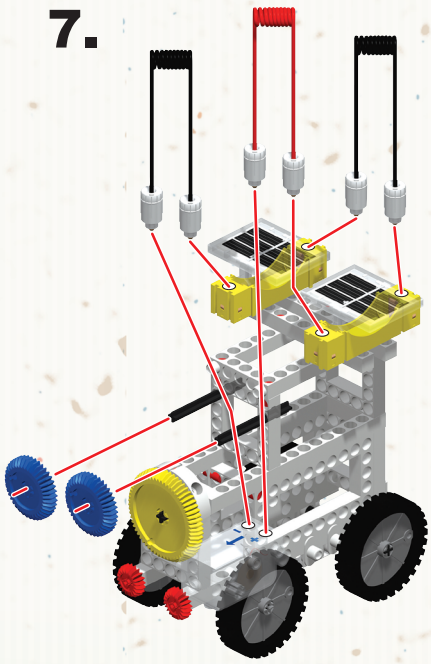

completed

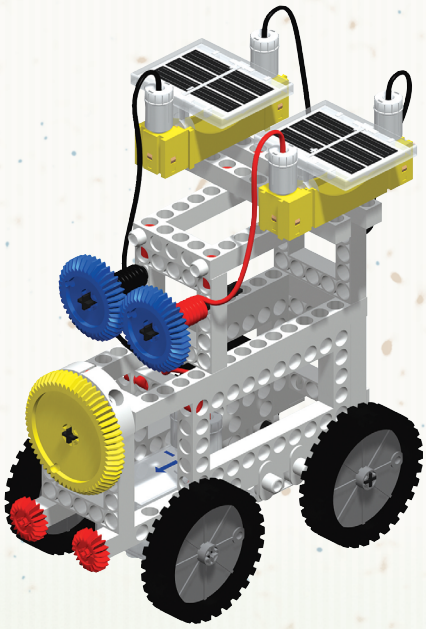

PARTS NEEDED

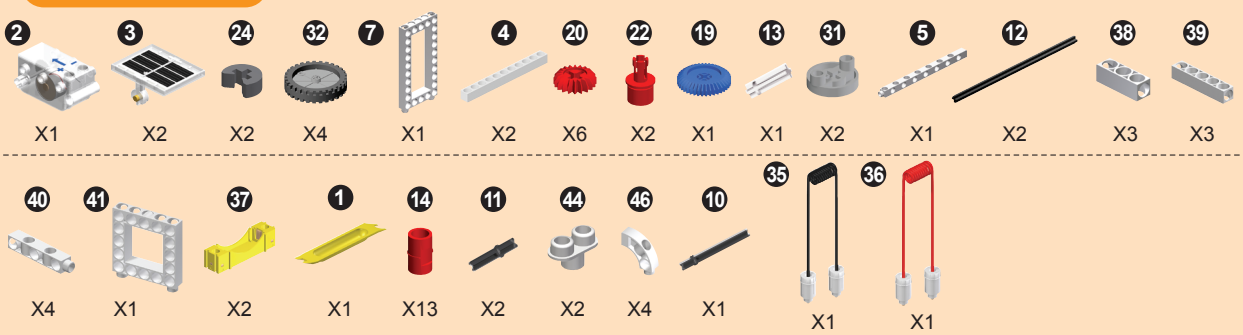

1.

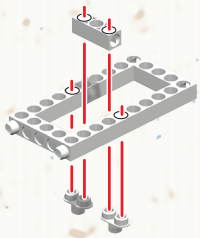

2.

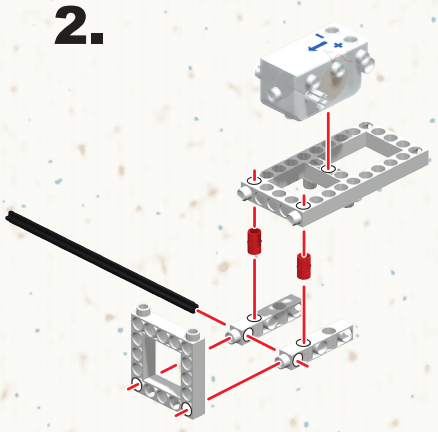

3.

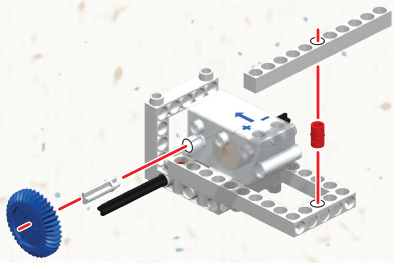

4.

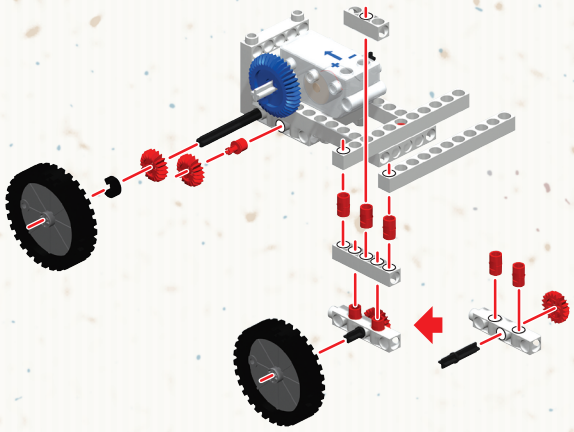

5.

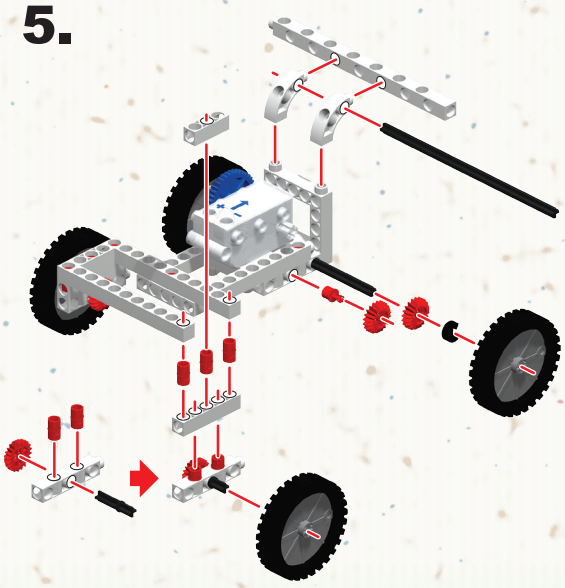

6.

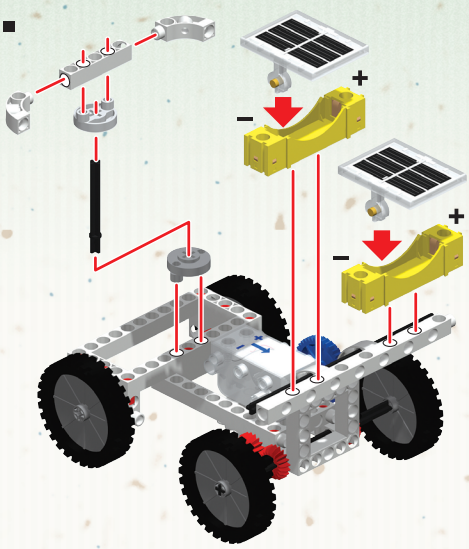

7.

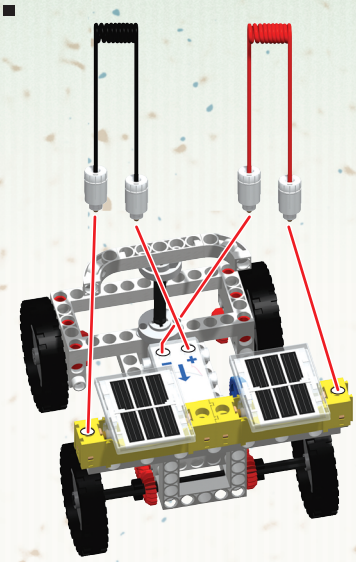

8.

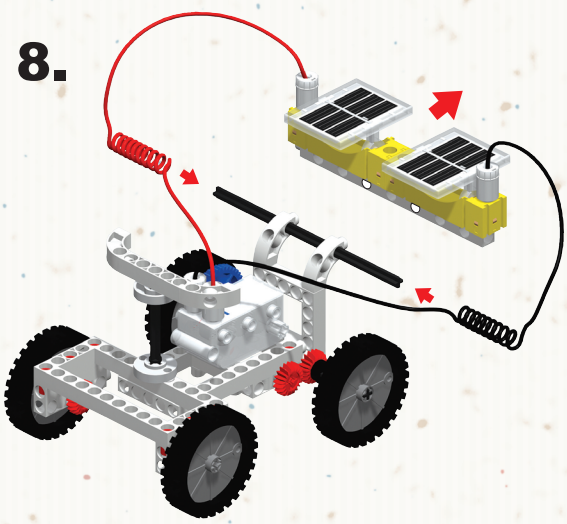

9.

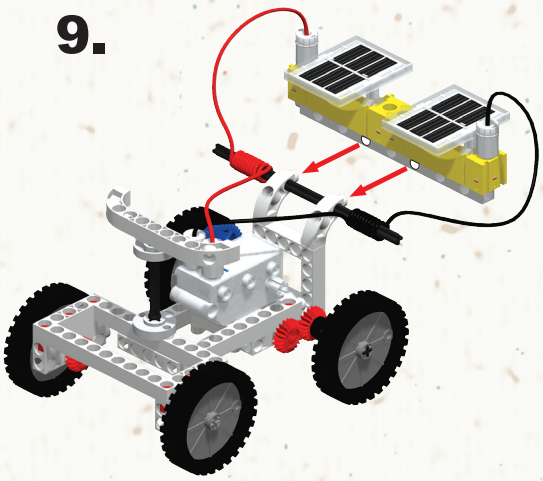

completed

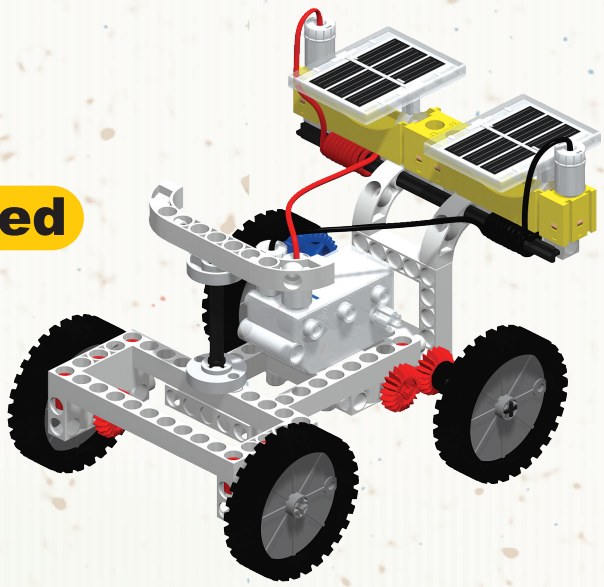

PARTS NEEDED

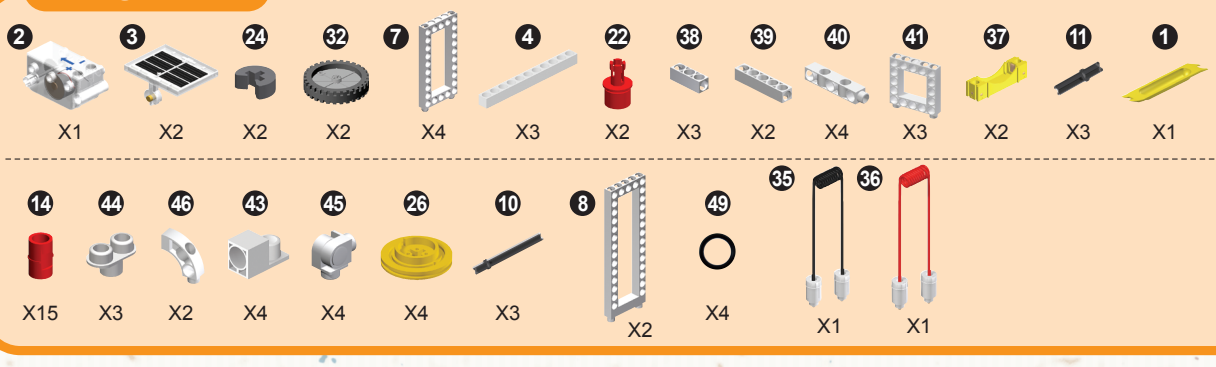

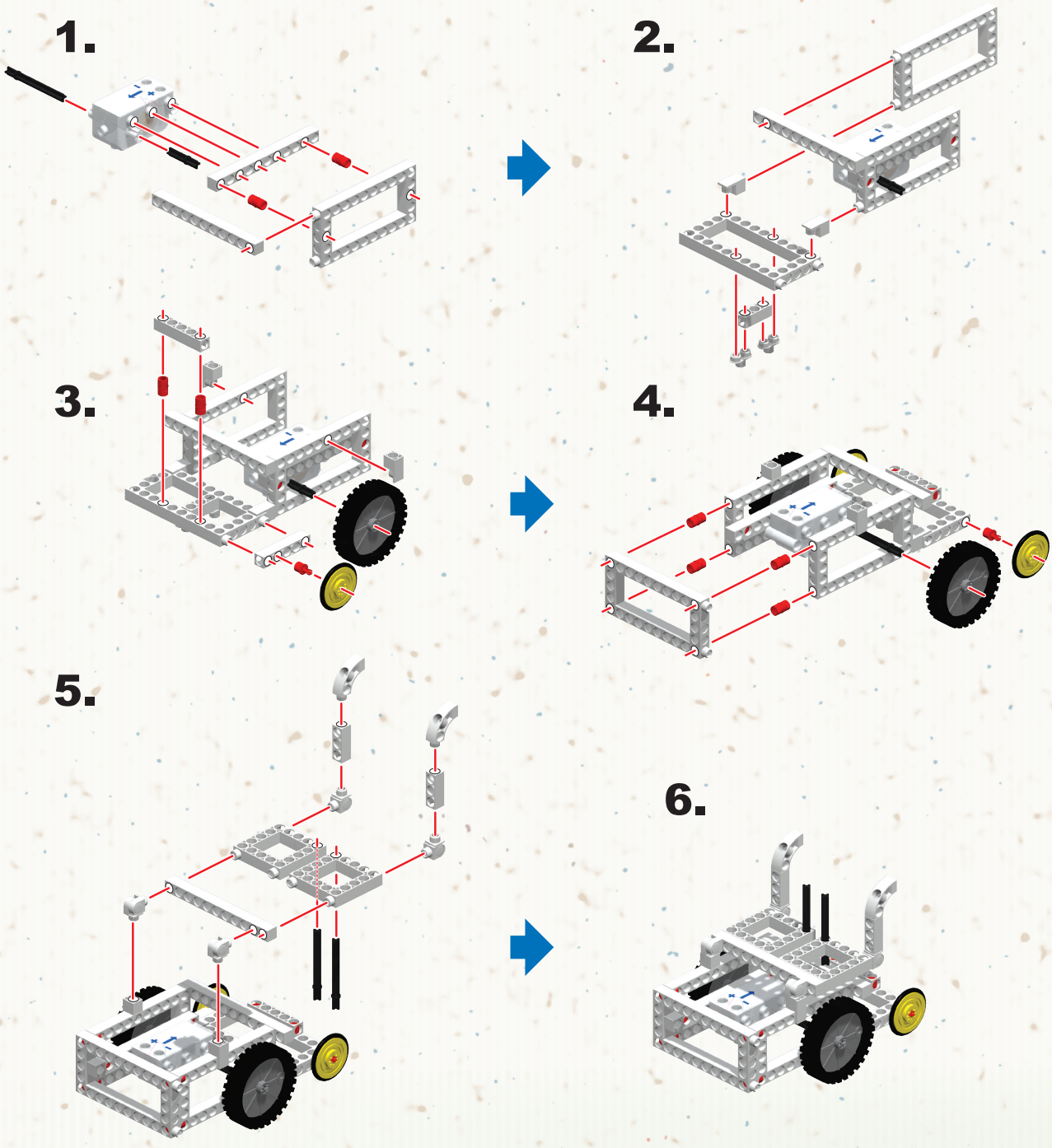

7.

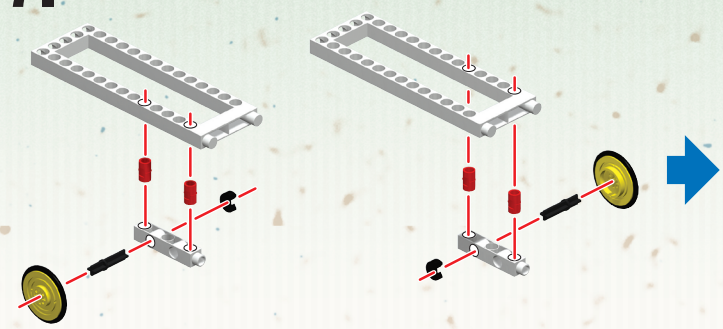

8.

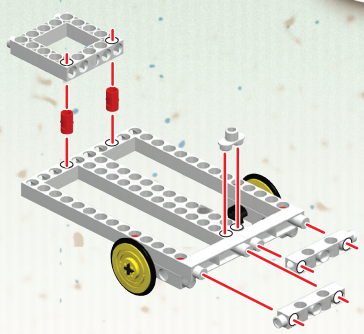

9.

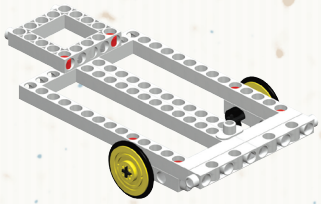

10.

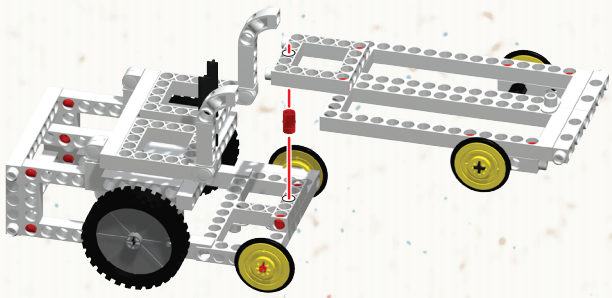

11.

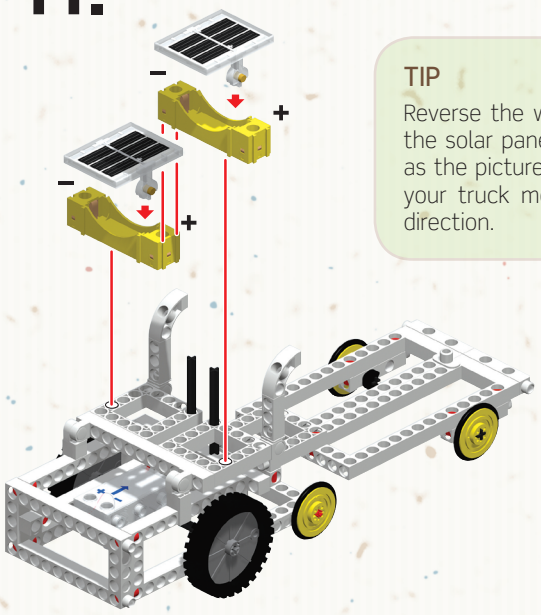

TIP

Reverse the wires connecting the solar panels to the motor as the picture shows to make your truck move in the right direction.

12.

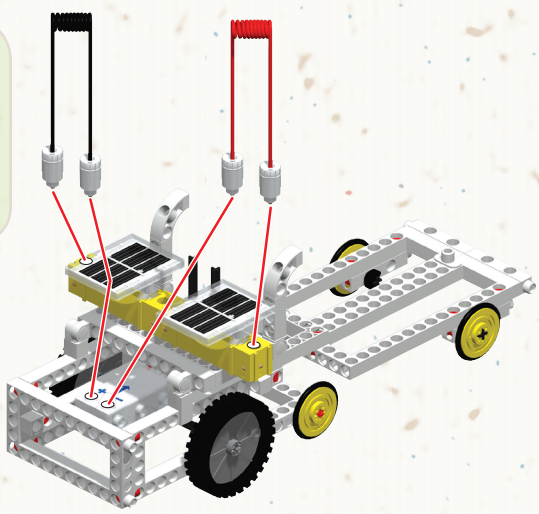

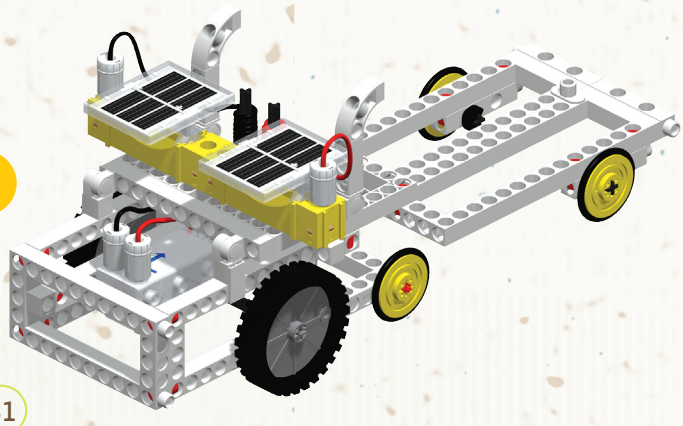

completed

PARTS NEEDED

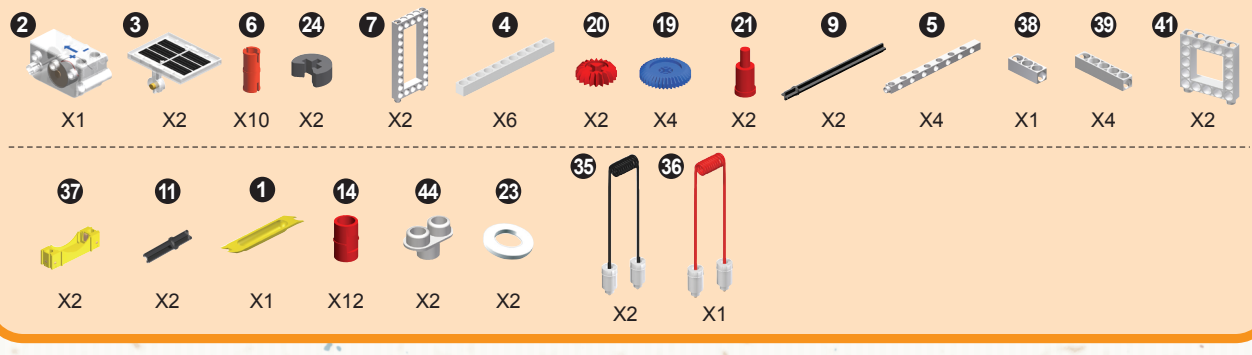

1.

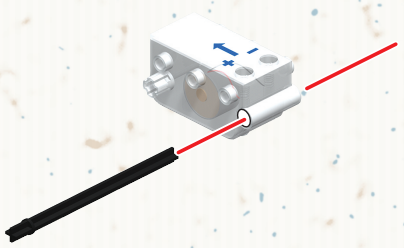

2.

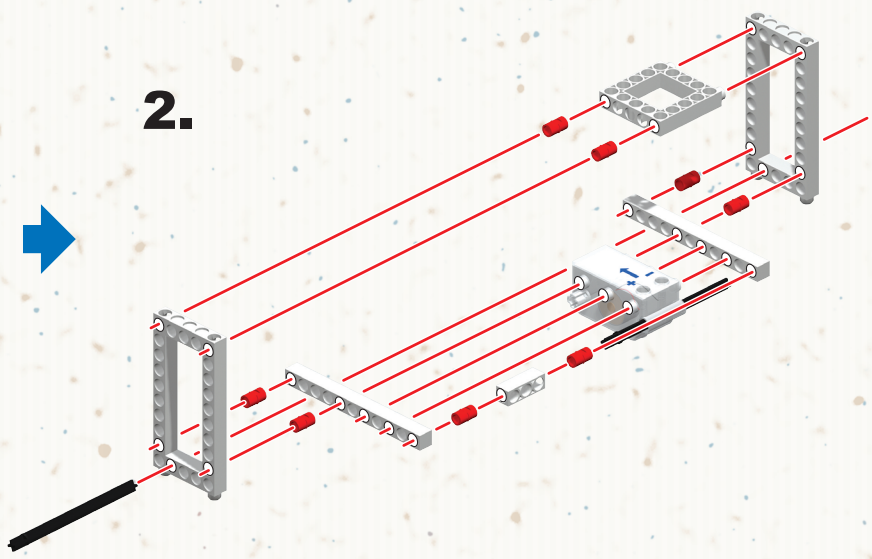

3.

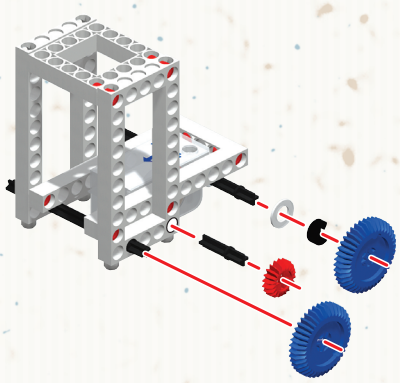

4.

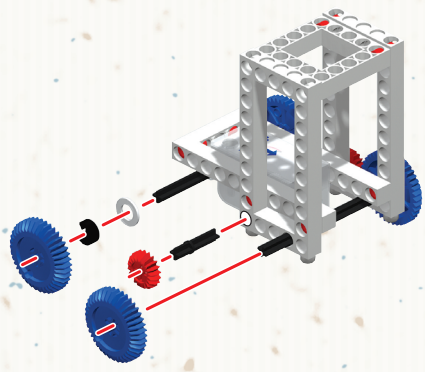

5.

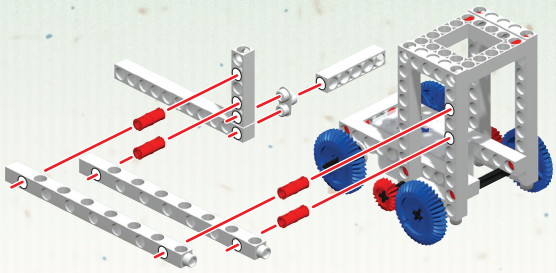

6.

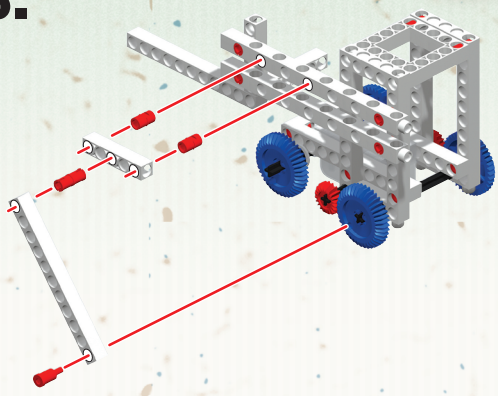

7.

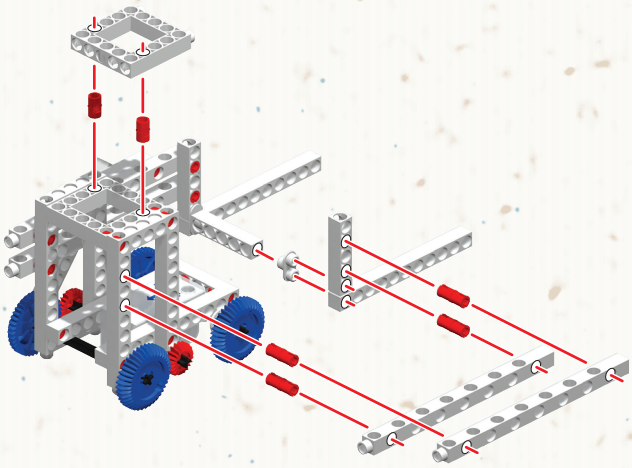

8.

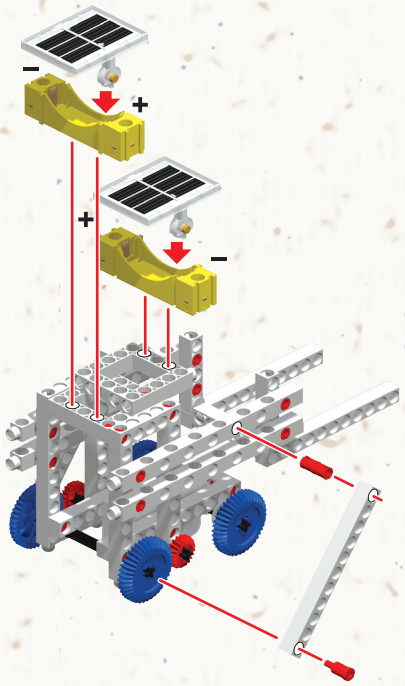

9.

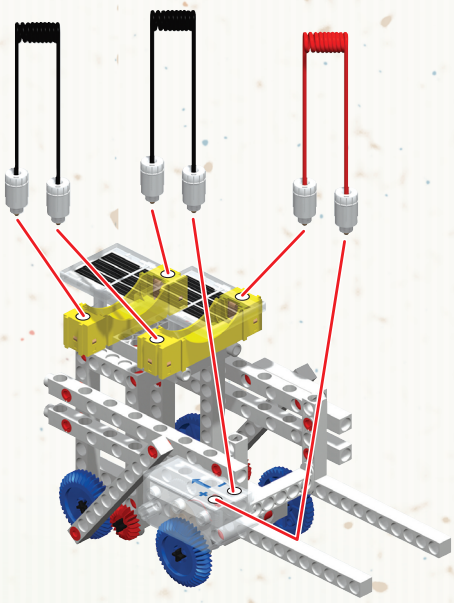

completed

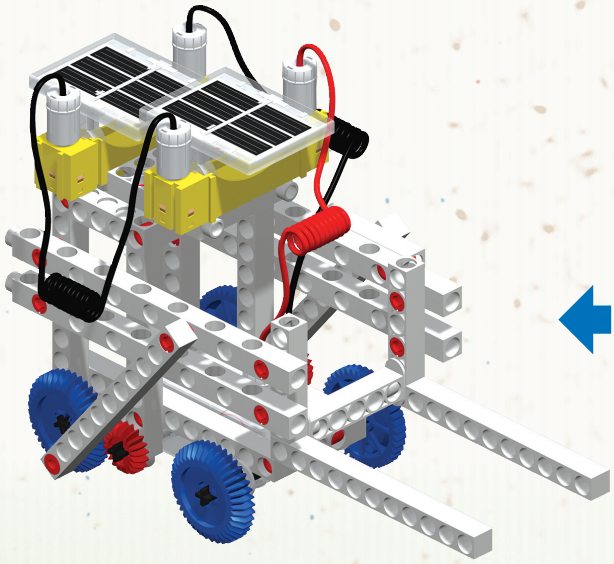

PARTS NEEDED

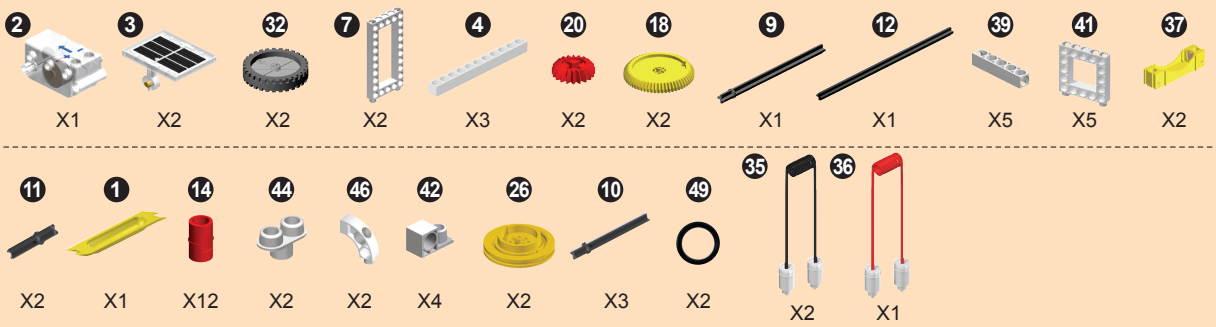

1.

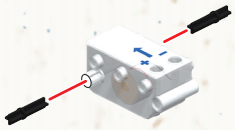

2.

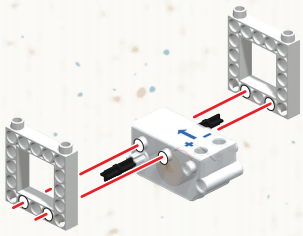

3.

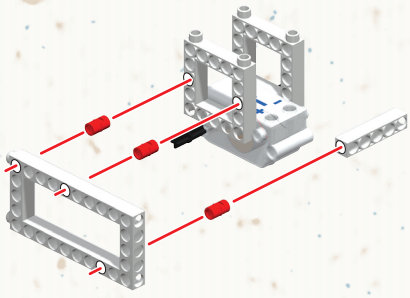

4.

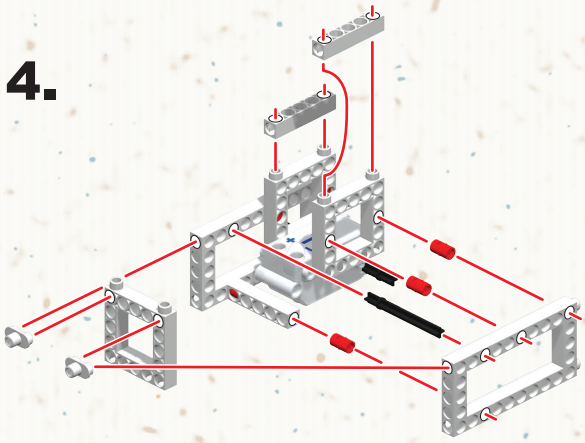

5.

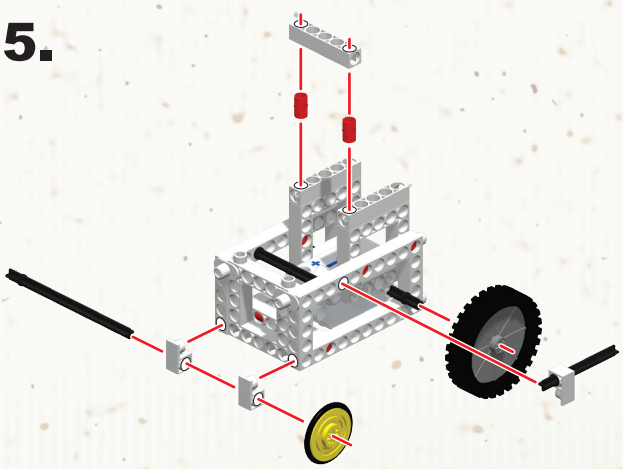

6.

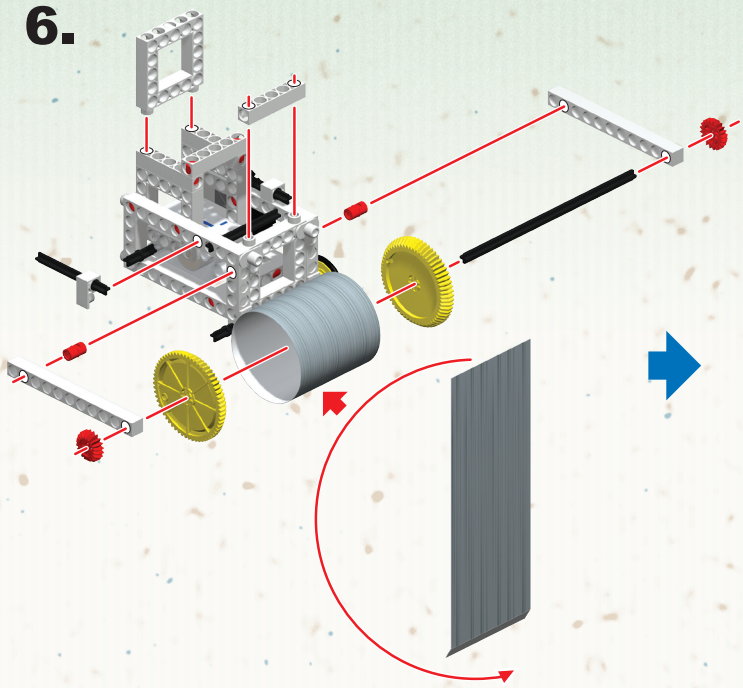

7.

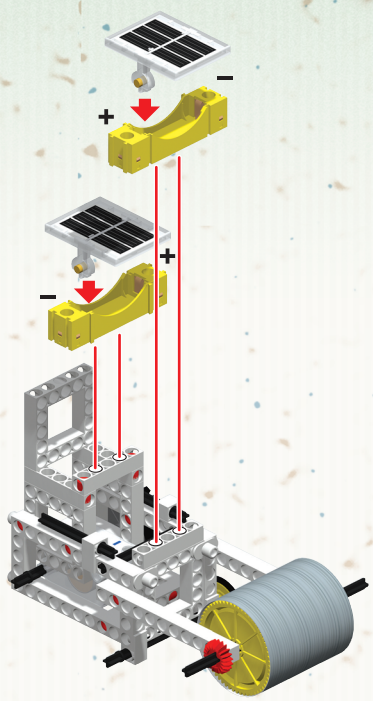

8.

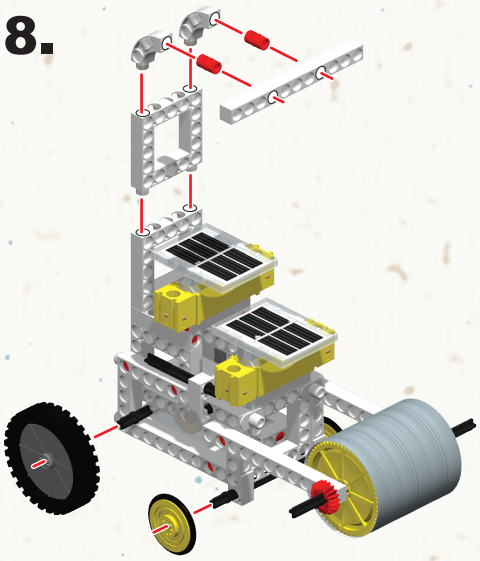

9.

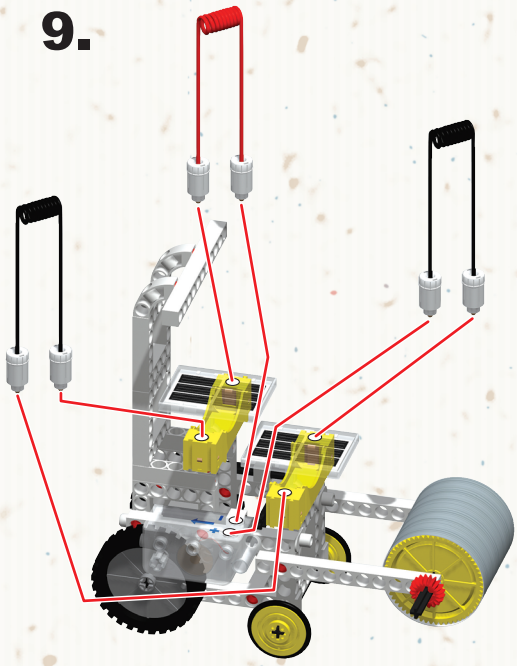



completed

TIP

Reverse the wires connecting the solar panels to the motor as the picture shows to make your roller move in the right direction.

PARTS NEEDED

2	3	17	24	32	16	15	20	18	9	5	12	38	39
X1	X2	X1	X4	X4	X1	X41	X2	X2	X1	X2	X1	X4	X9

1	40	41	37	11	14	46	42	10	23	35	36
X1	X6	X2	X2	X1	X24	X1	X2	X4	X1	X2	X1

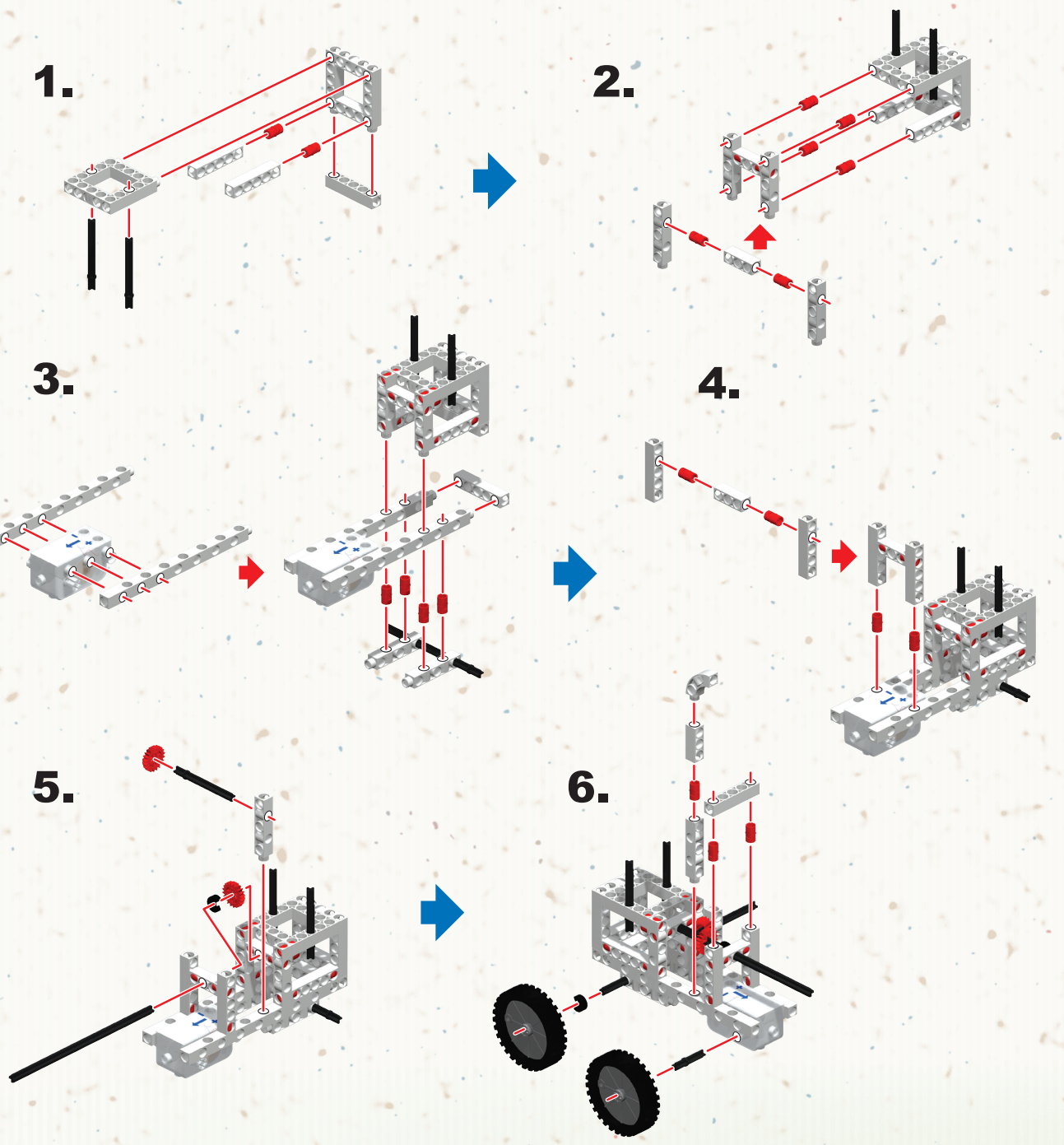

7.

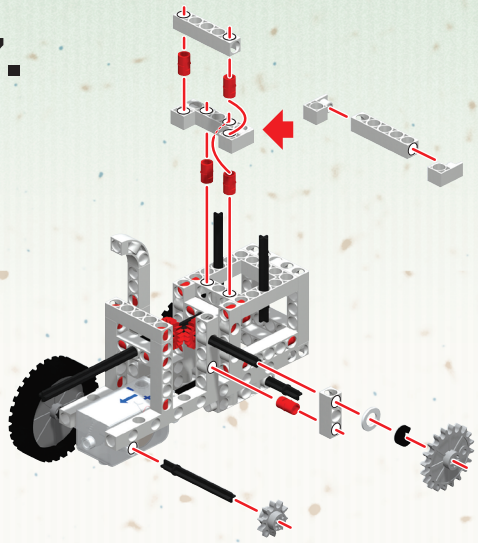

8.

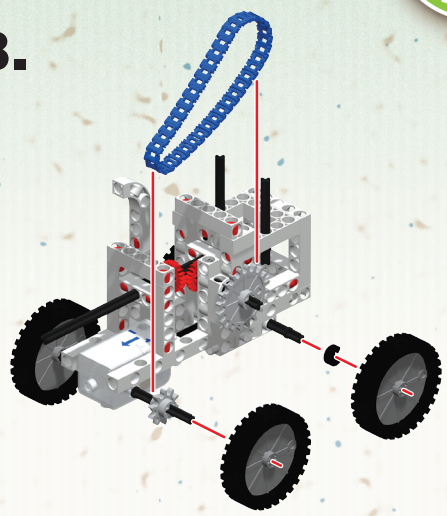

9.

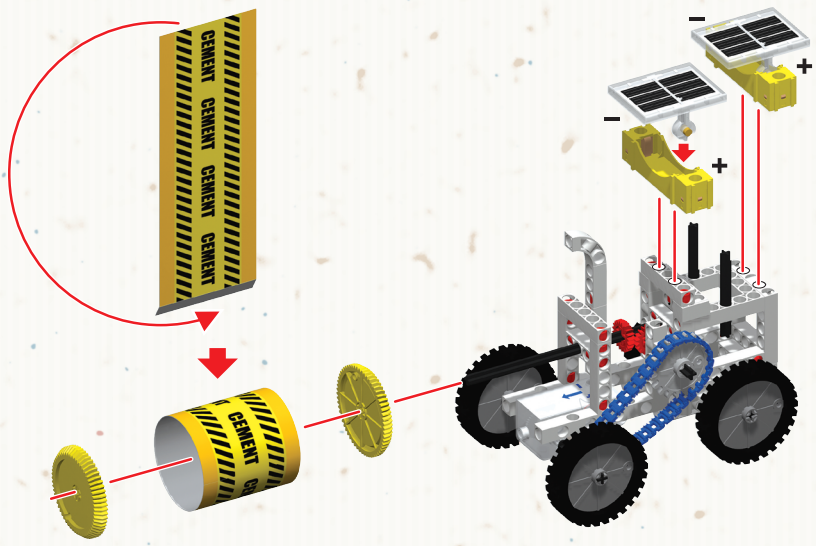

10.

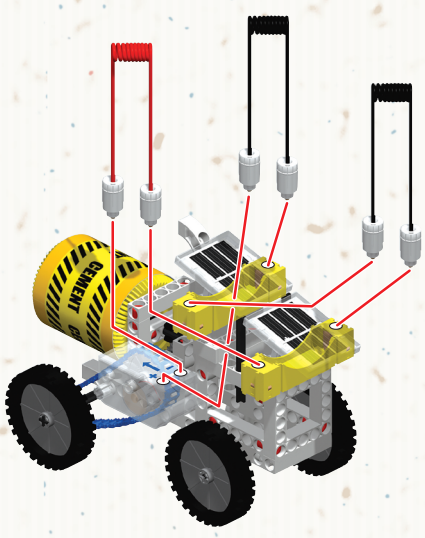

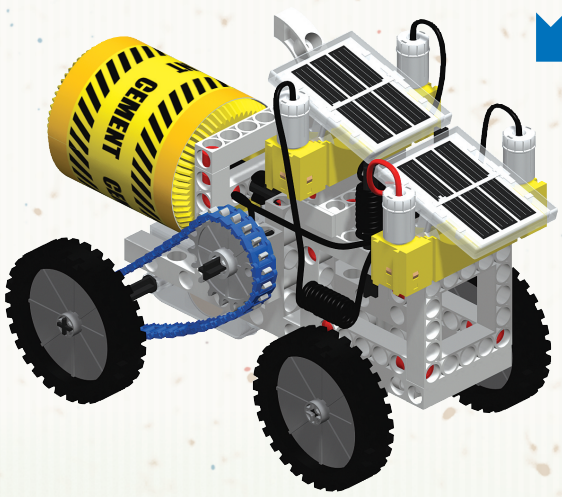

TIP

Reverse the wires connecting the solar panels to the motor as the picture shows to make your truck move in the right direction.

completed

PARTS NEEDED

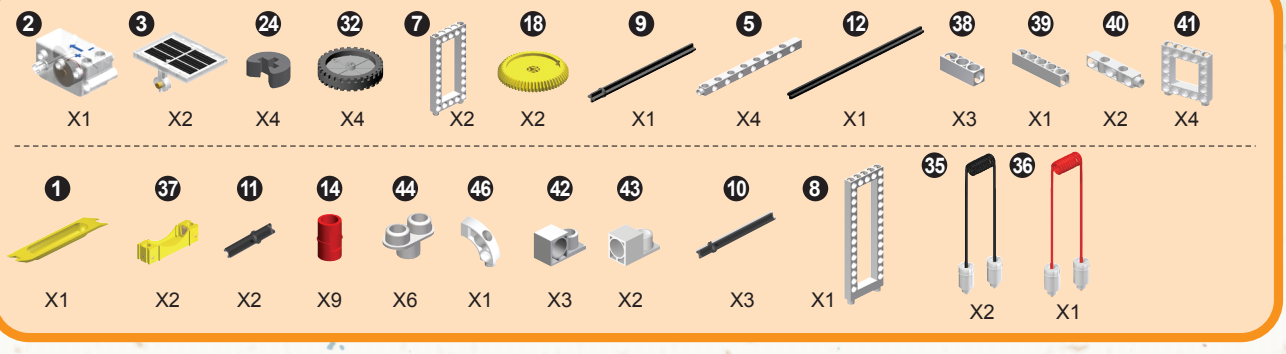

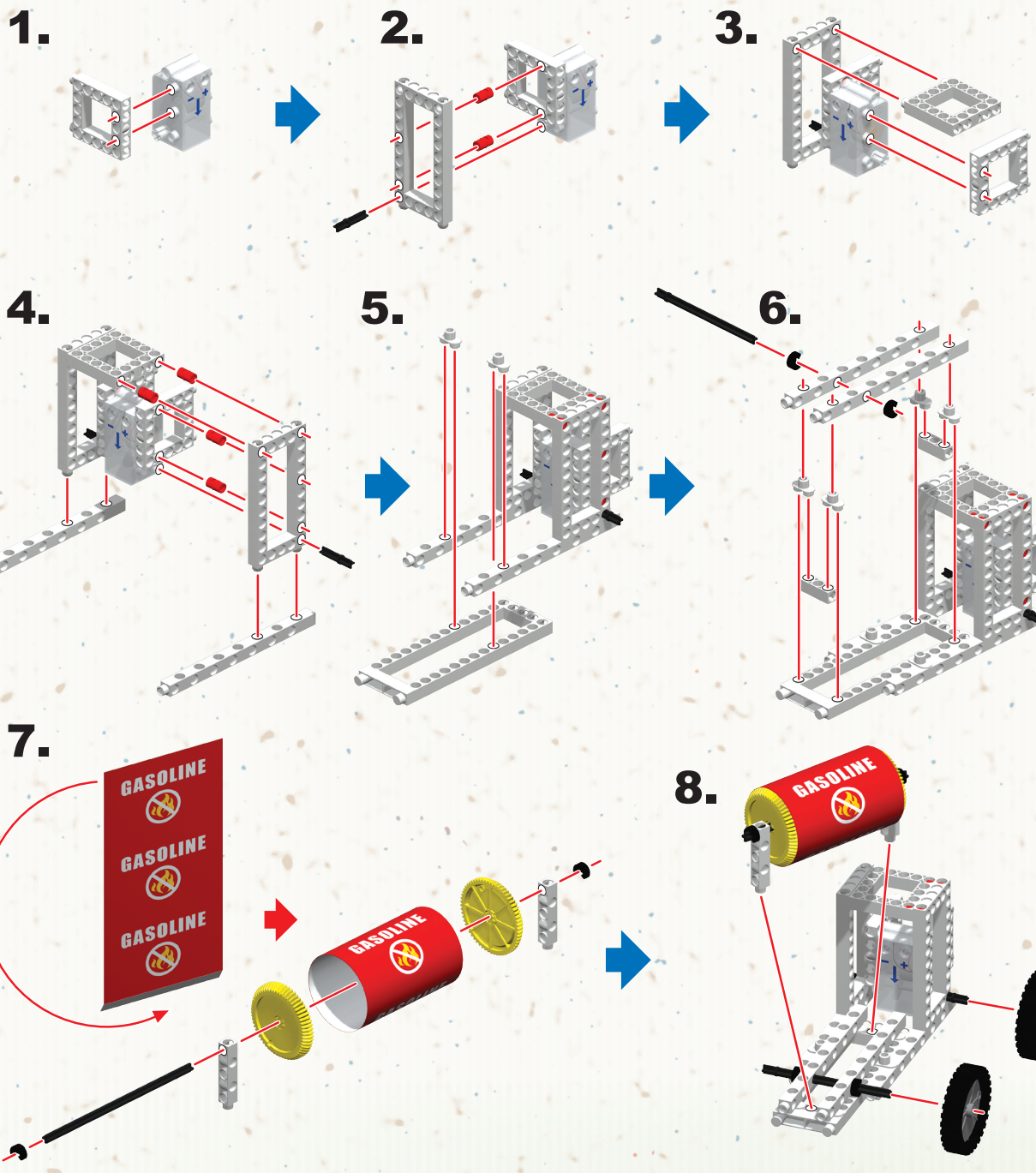

9.

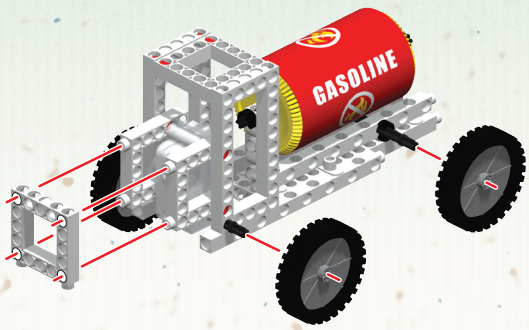

10.

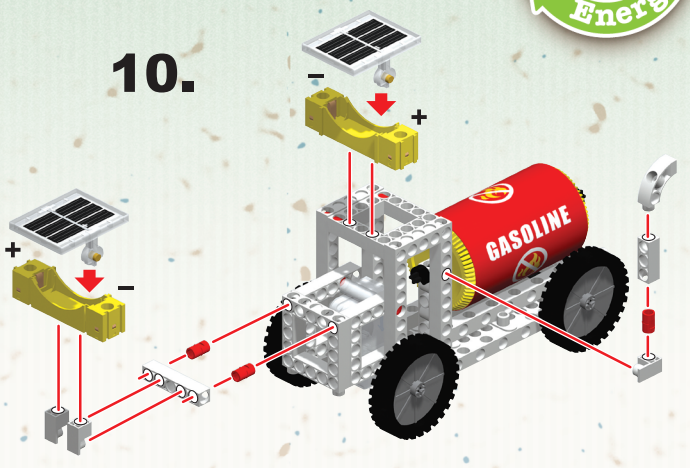

11.

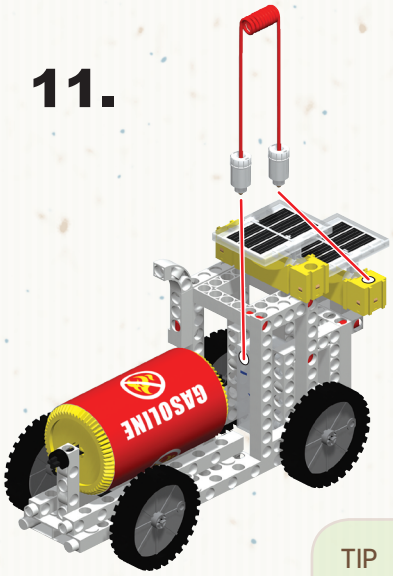

12.



13.

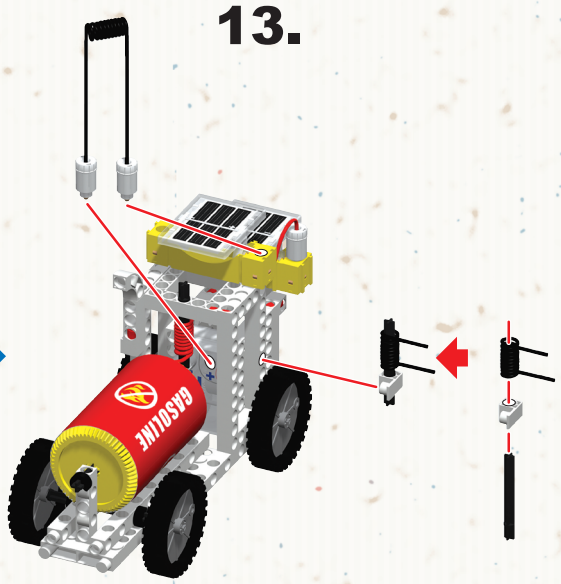

TIP

Reverse the wires connecting the solar panels to the motor as the picture shows to make your truck move in the right direction.

14.

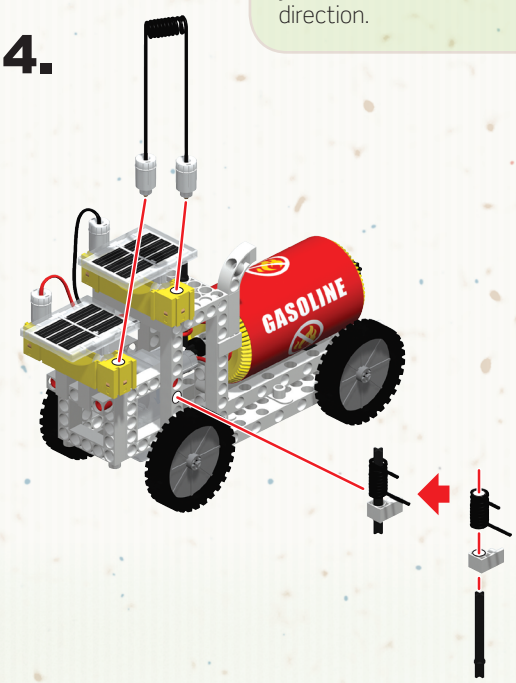

completed



PARTS NEEDED

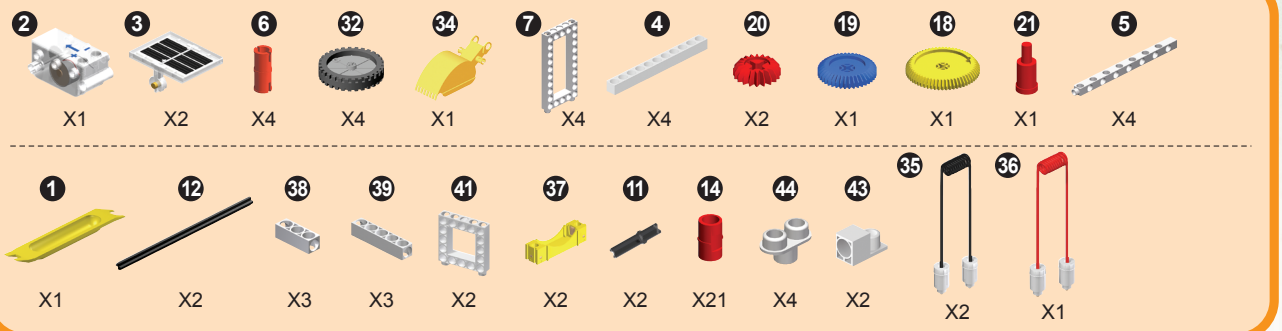

1.

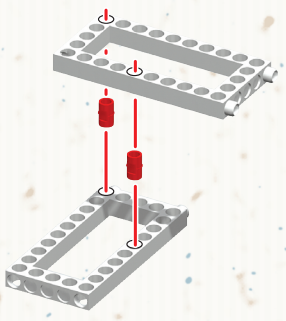

2.

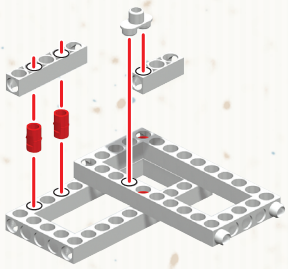

3.

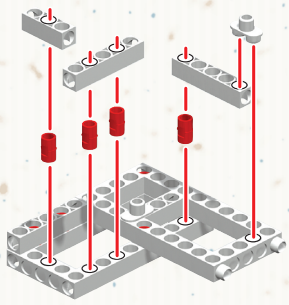

4.

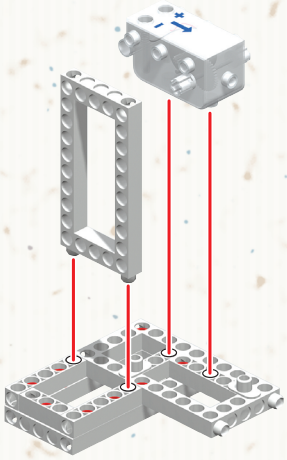

5.

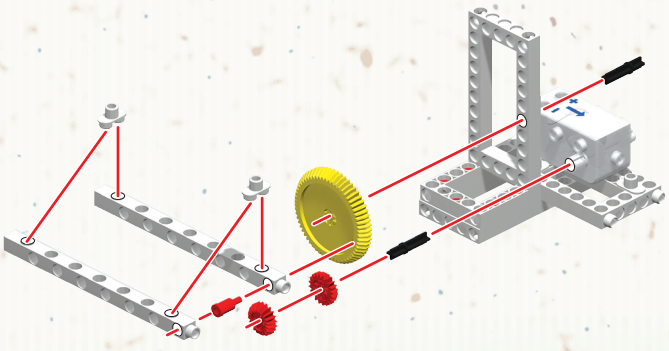

6.

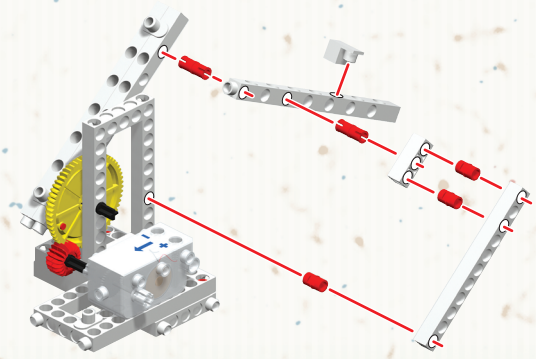

7.

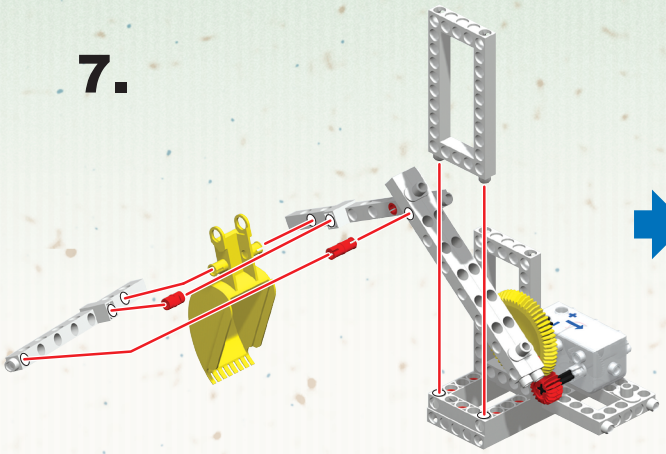

8.

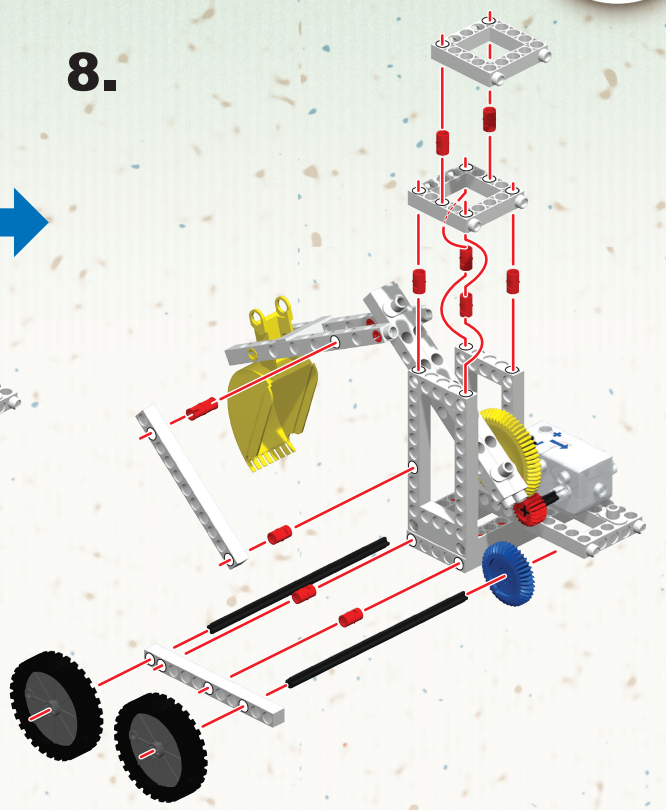

9.

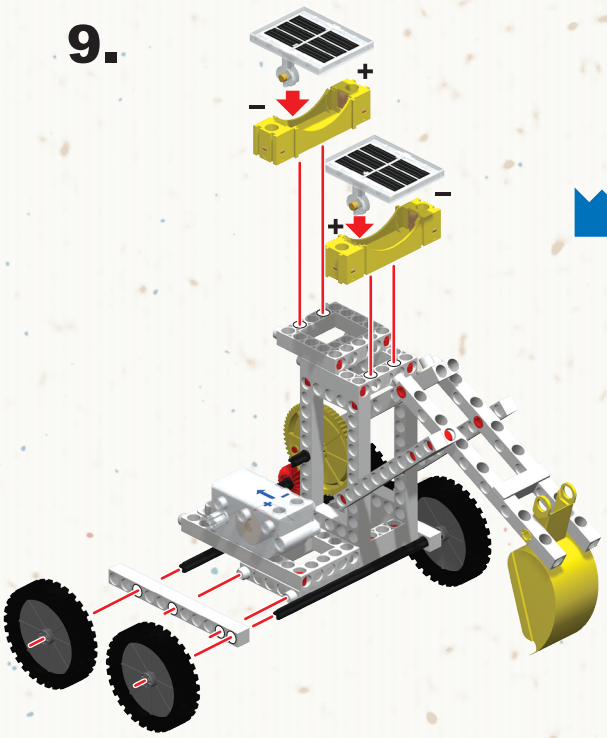

10.

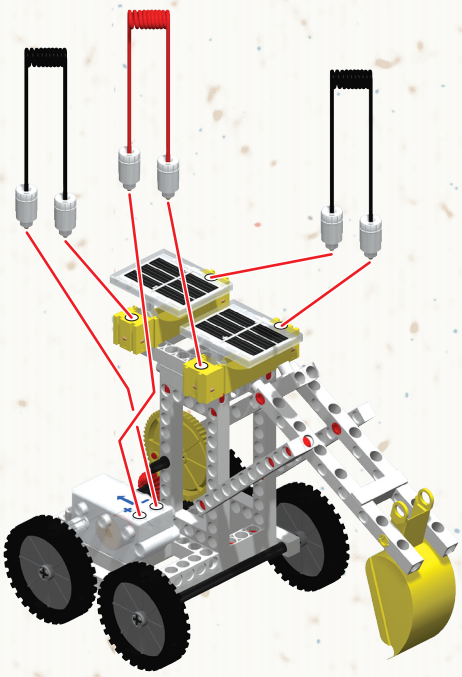

completed

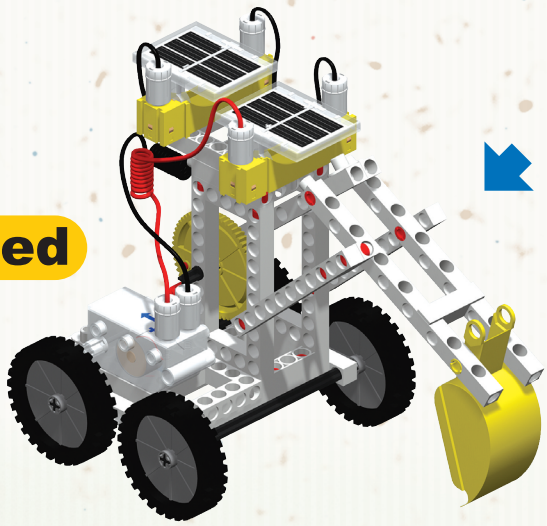

PARTS NEEDED

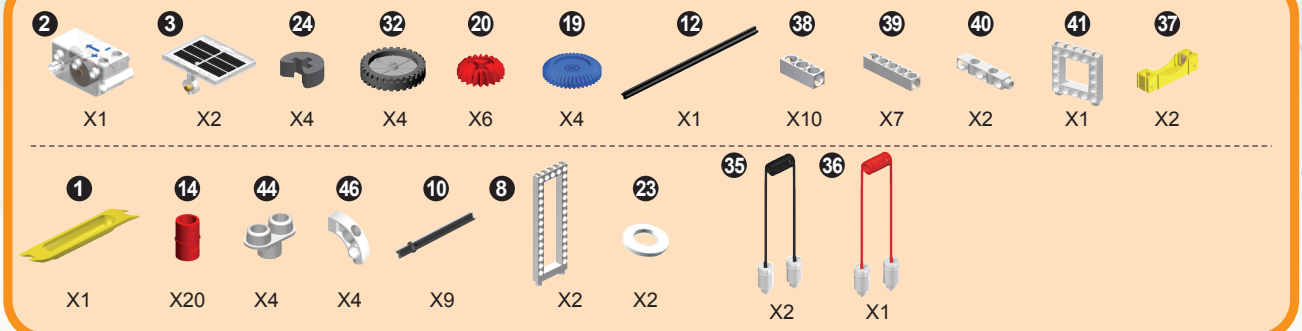

1.

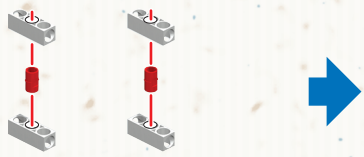

2.

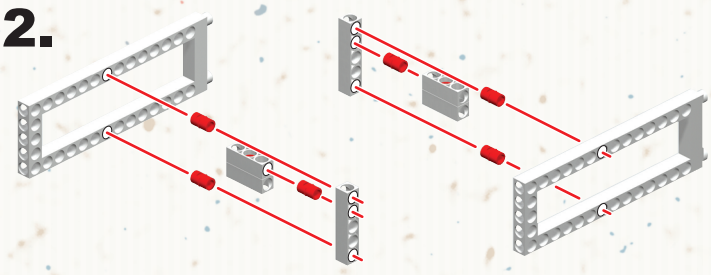

3.

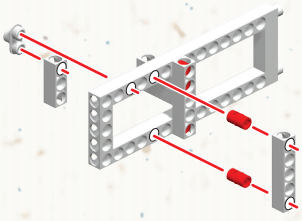

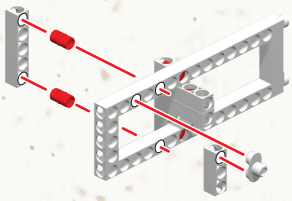

4.

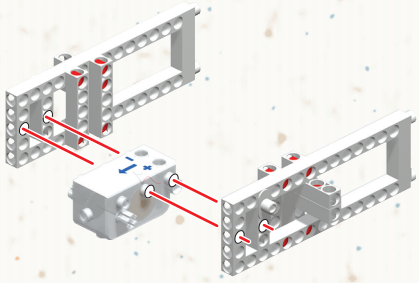

5.

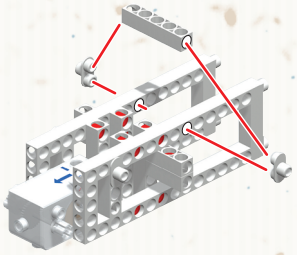

6.

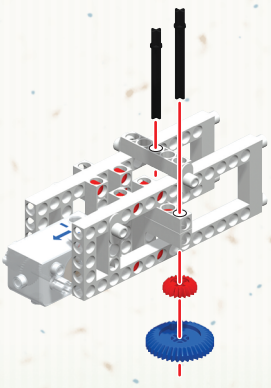

7.

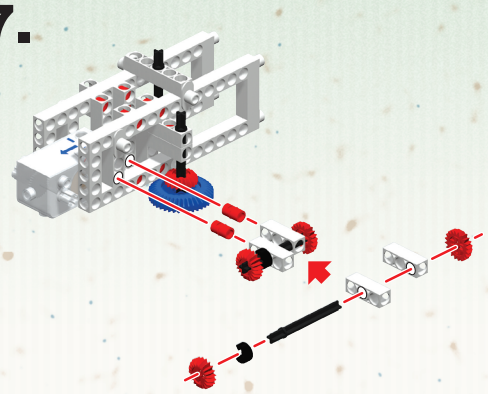

8.

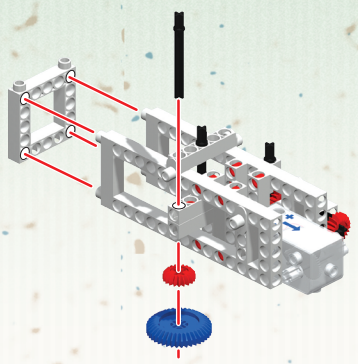

9.

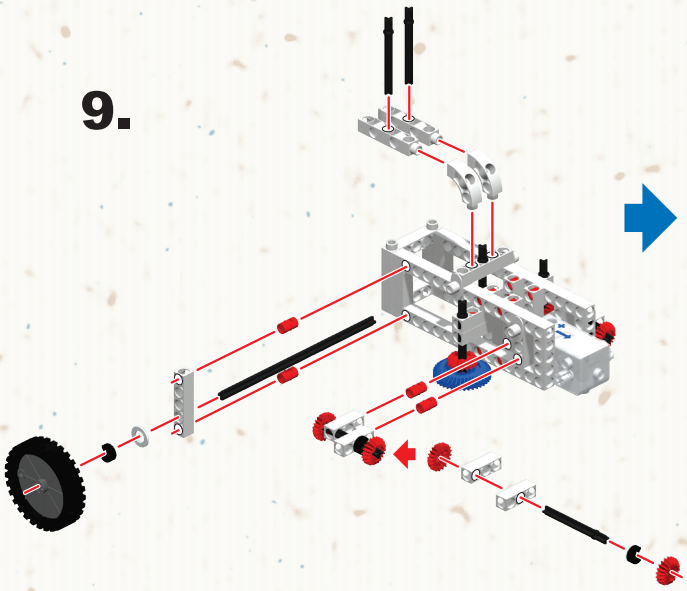

10.

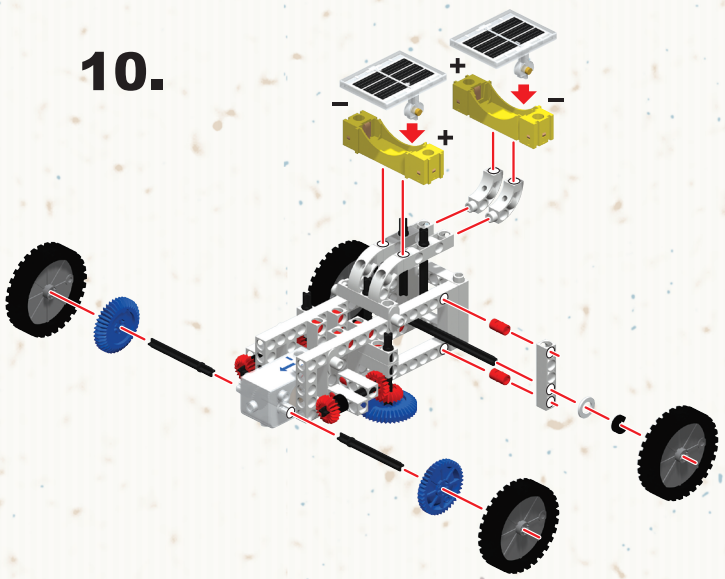

11.

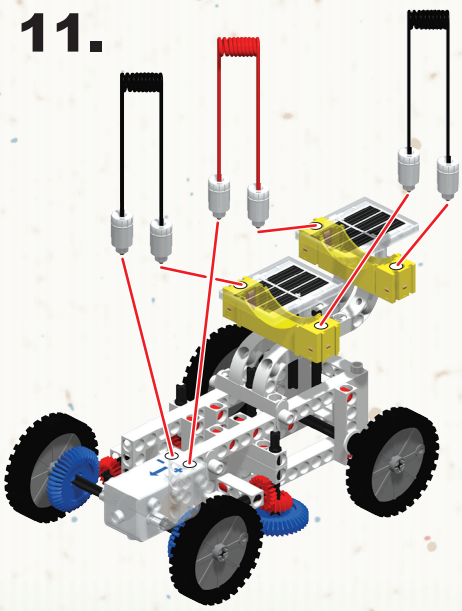

completed

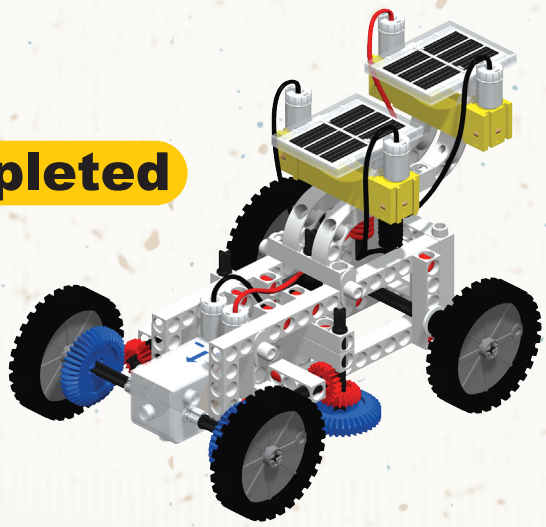

PARTS NEEDED

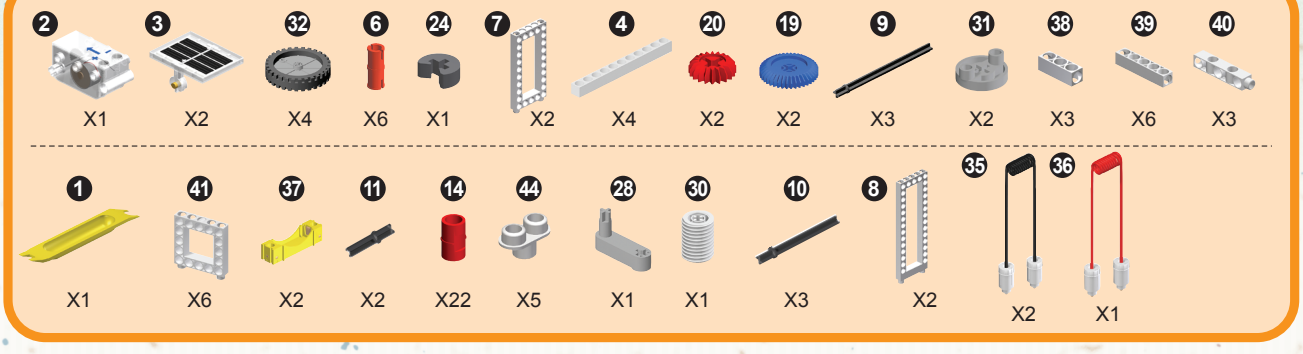

1.

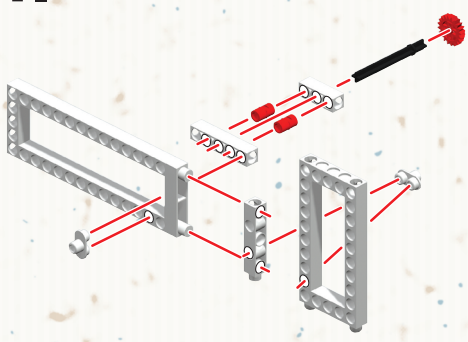

2.

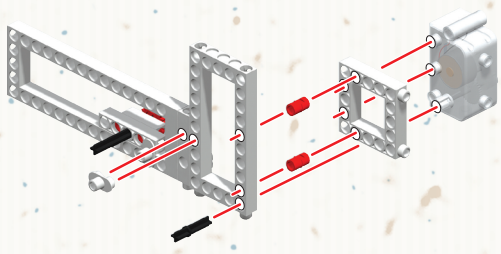

3.

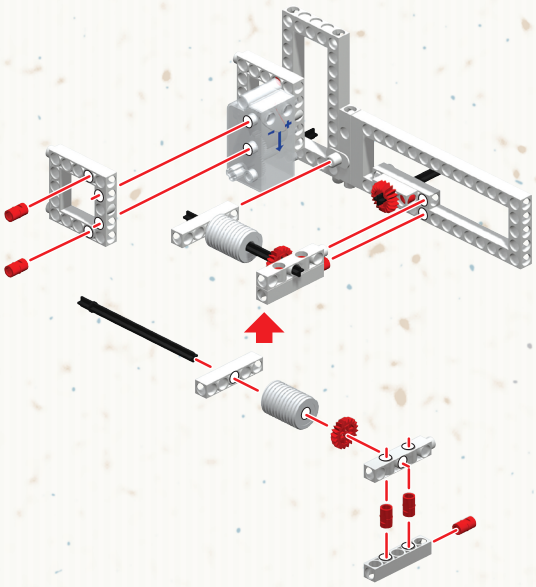

4.

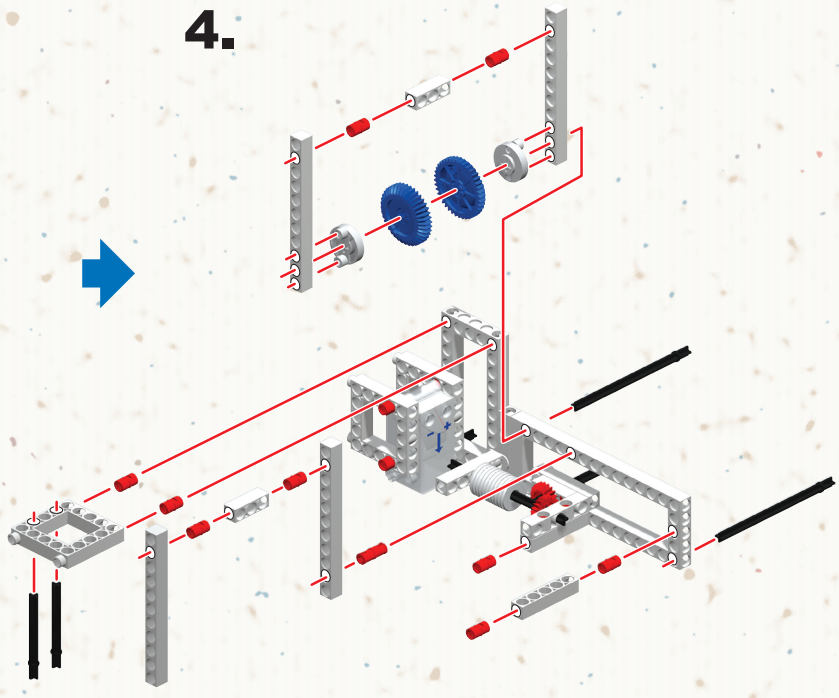

5.

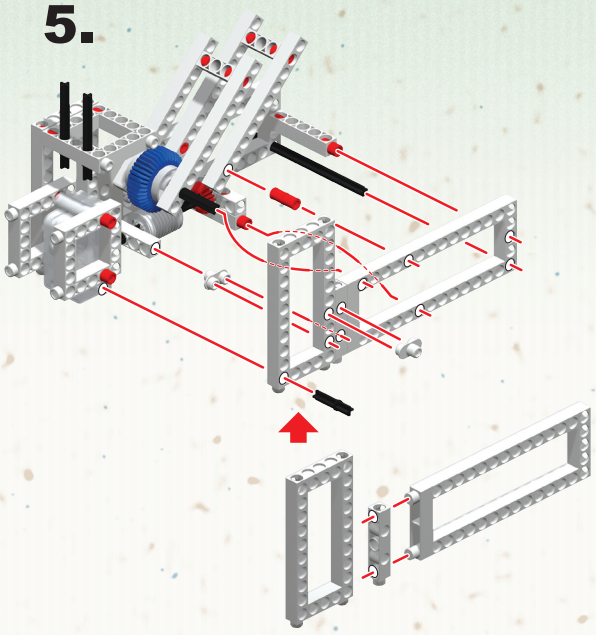

6.

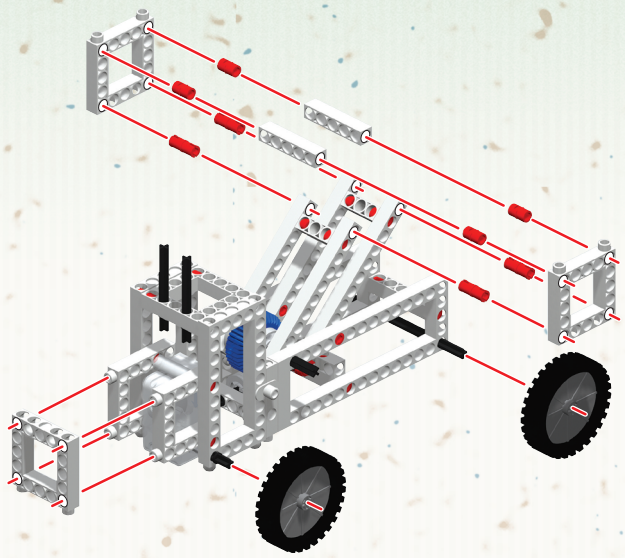

7.

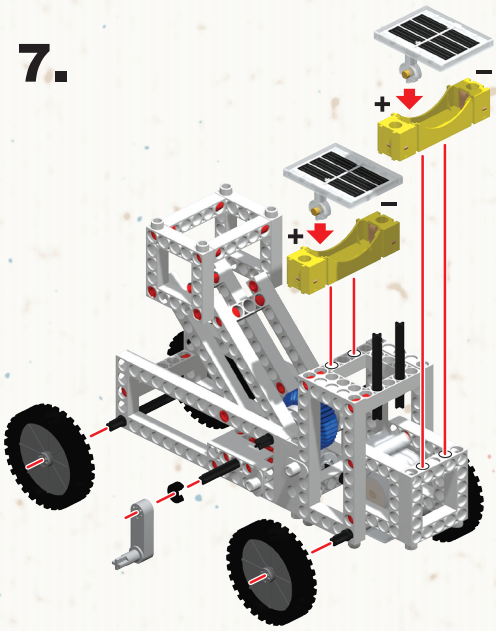

8.

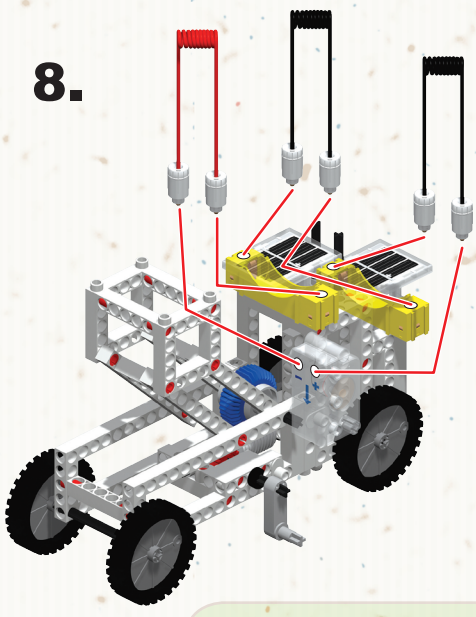

TIP

Reverse the wires connecting the solar panels to the motor as the picture shows to make your car move in the right direction.

completed

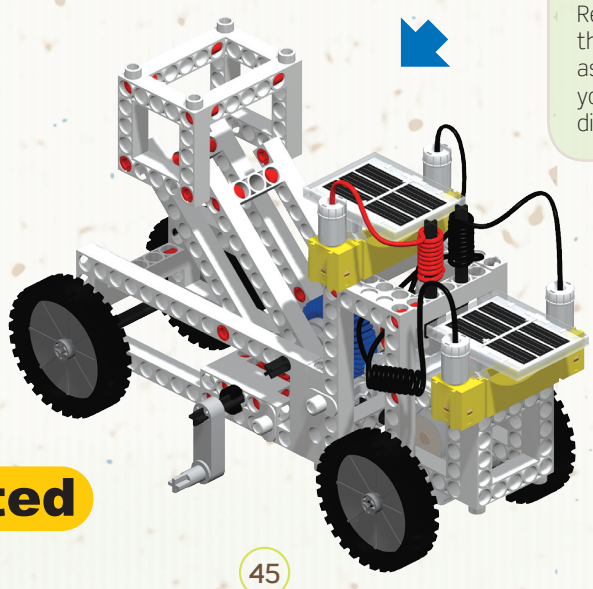

PARTS NEEDED

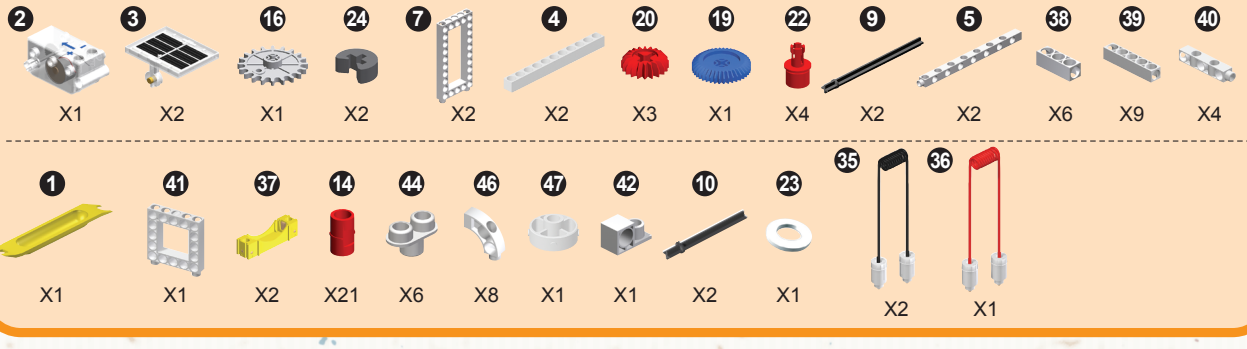

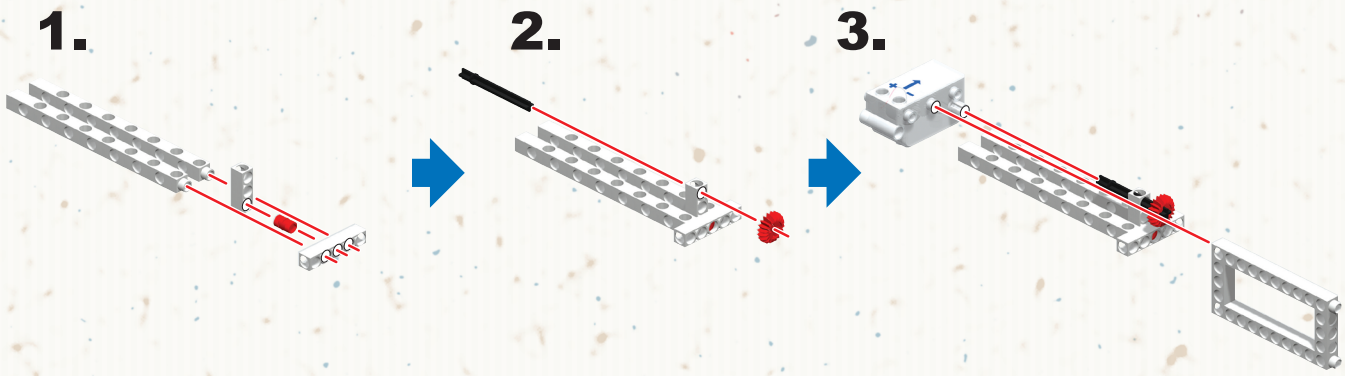

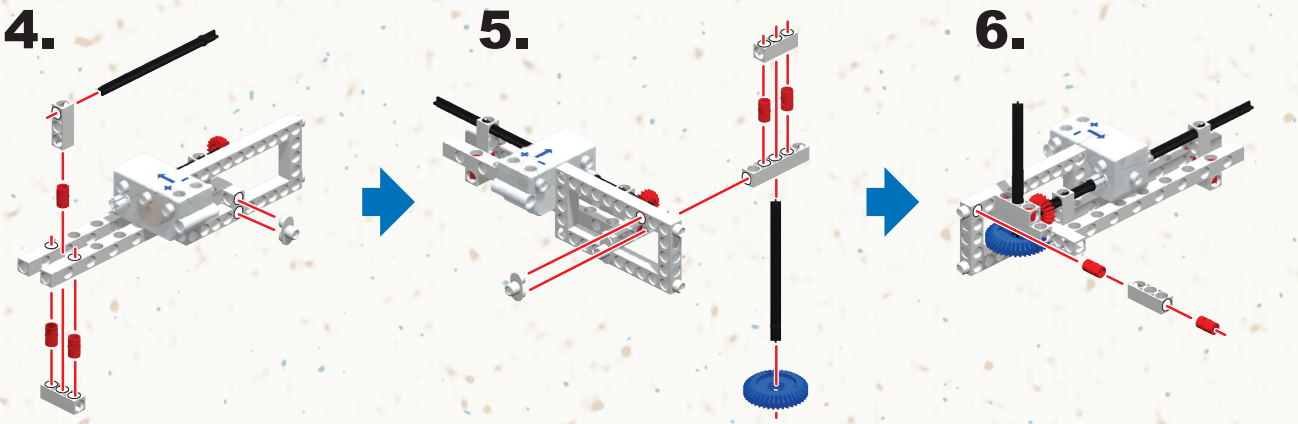

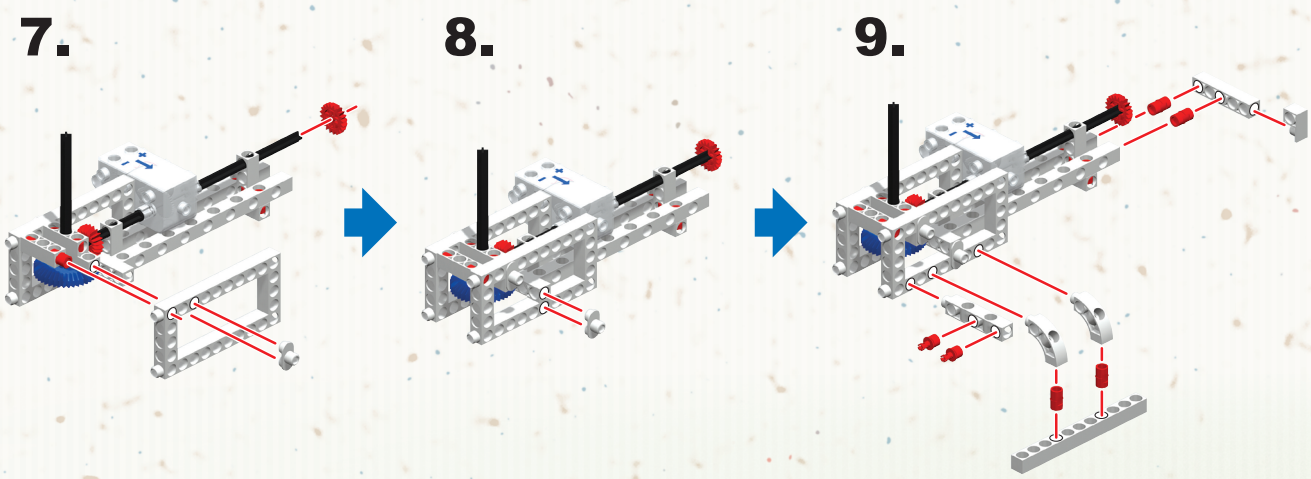

10.

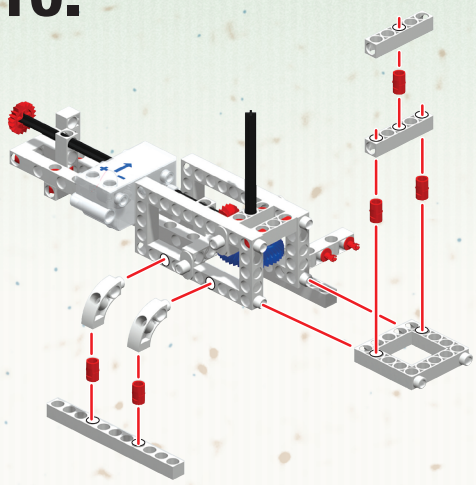

11.

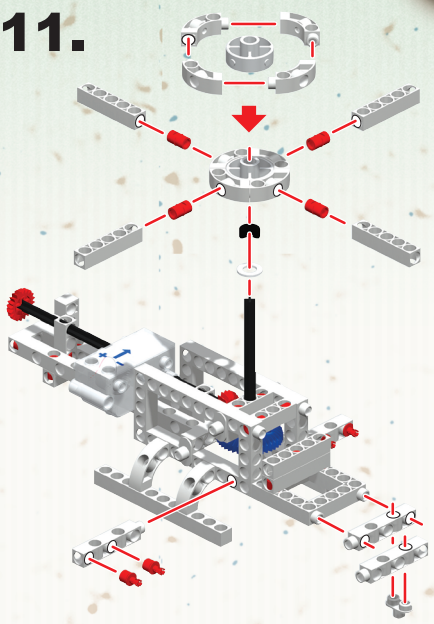

12.

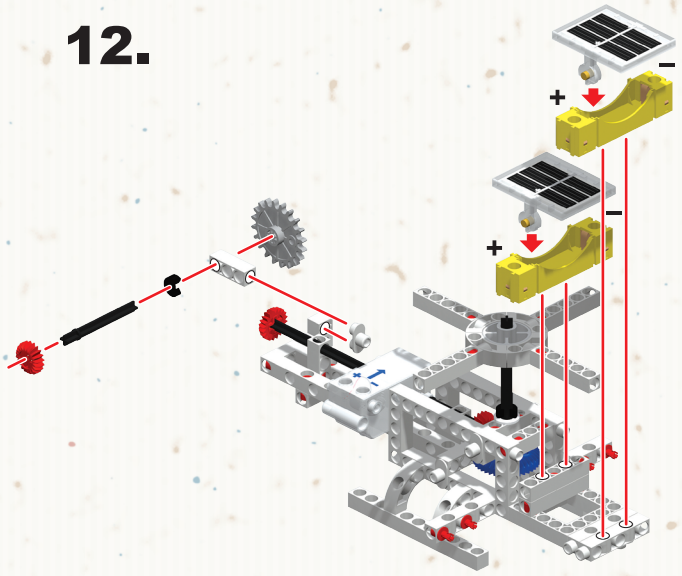

13.

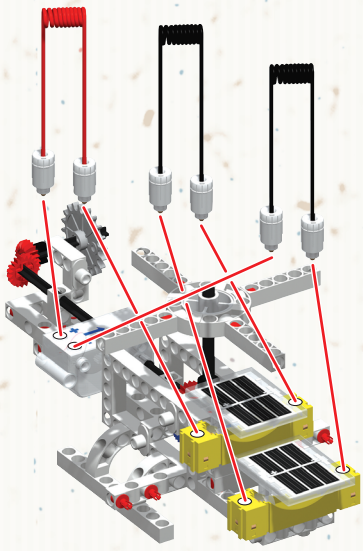

completed

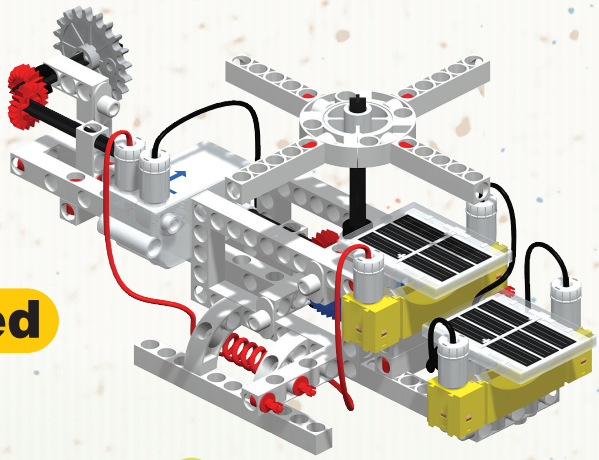

SOLAR POWER PLUS | Twin-prop Airplane

PARTS NEEDED

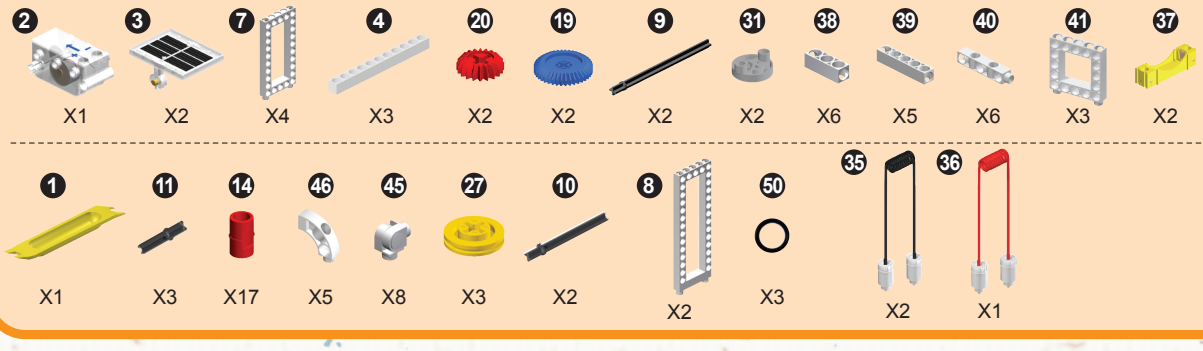

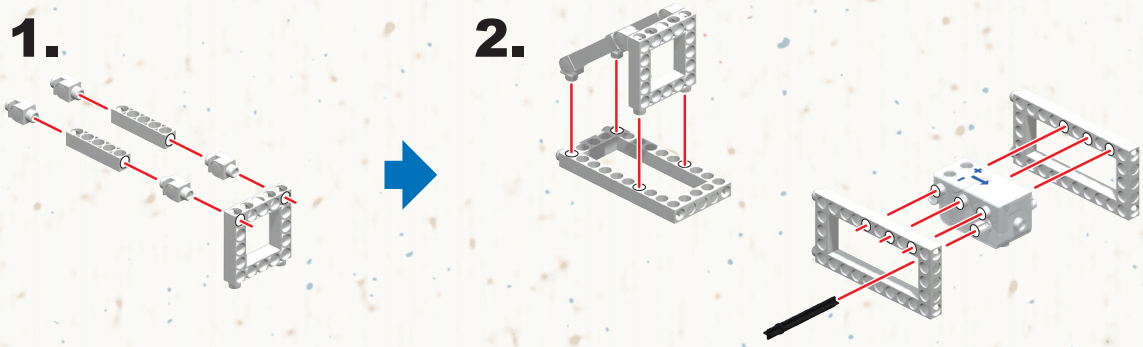

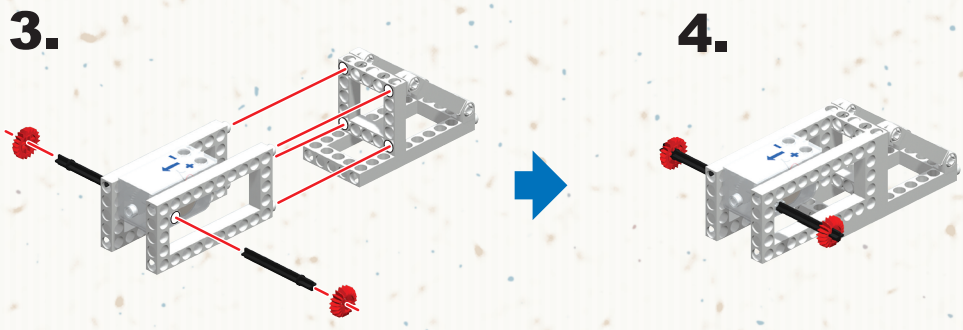

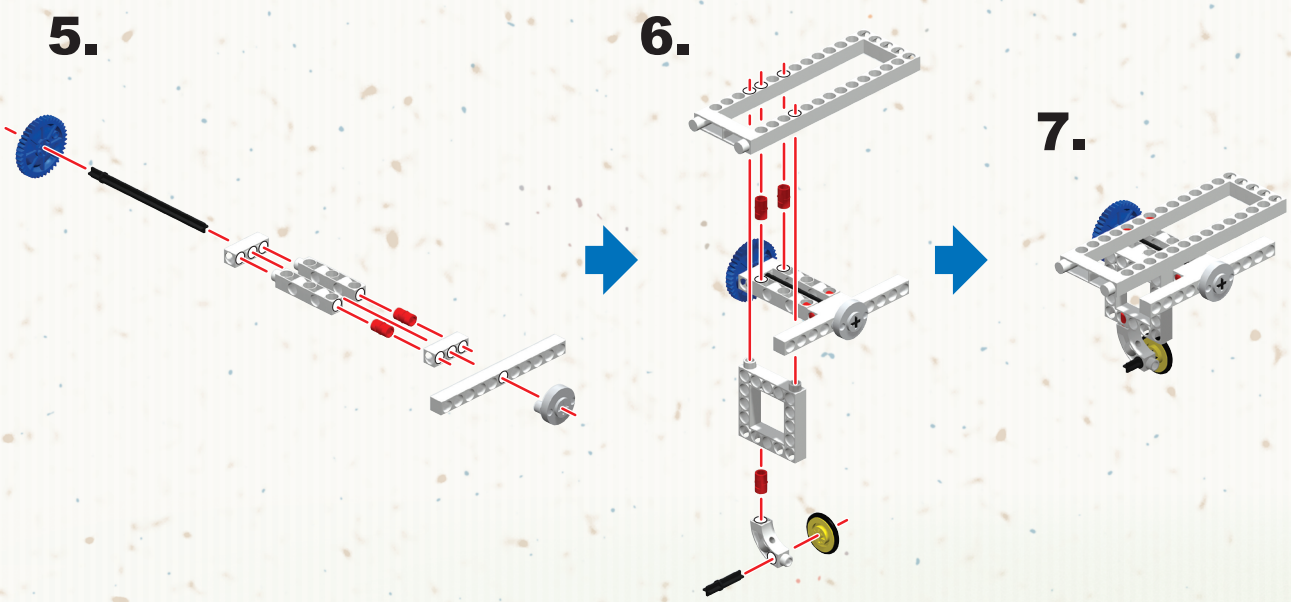

8.

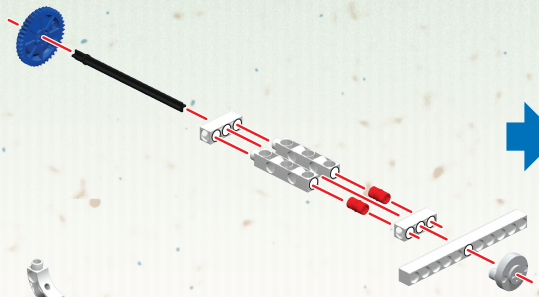

9.

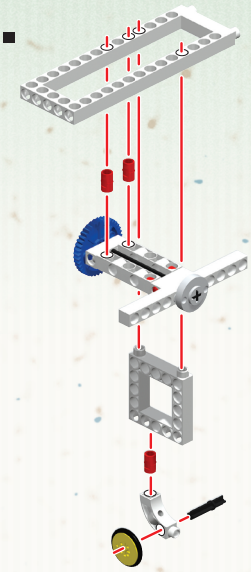

10.

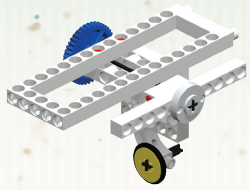

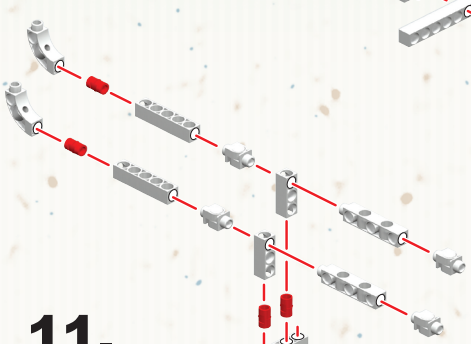

11.

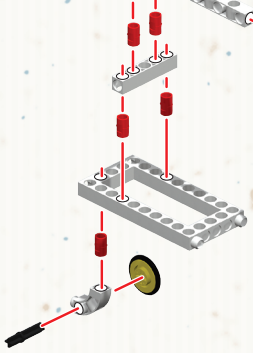

12.

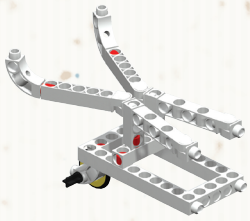

13.

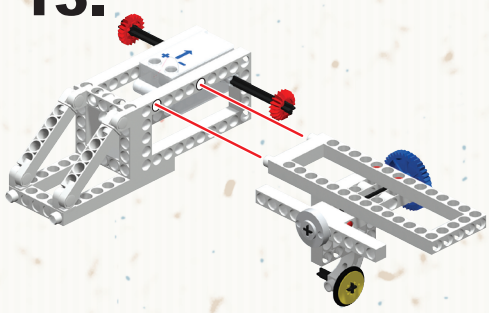

14.

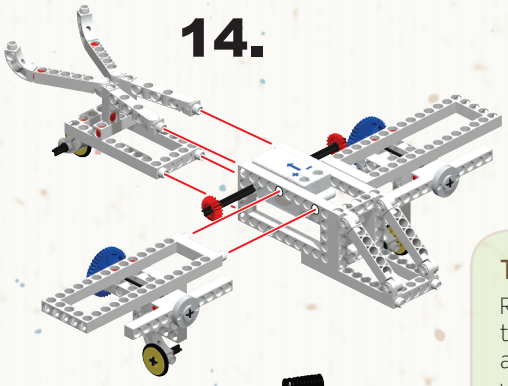

15.

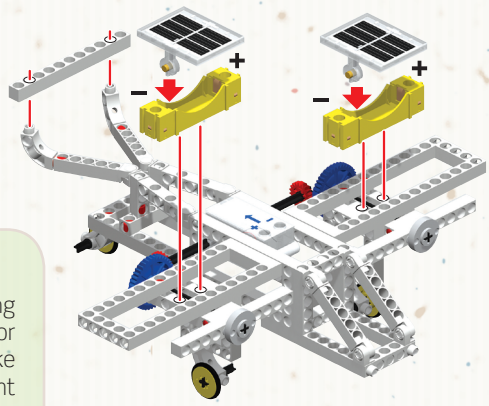

TIP

Reverse the wires connecting the solar panels to the motor as the picture shows to make your plane move in the right direction.

16.

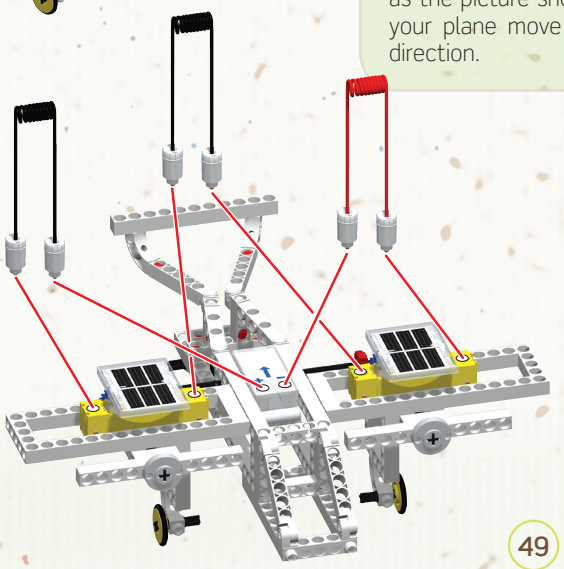

completed

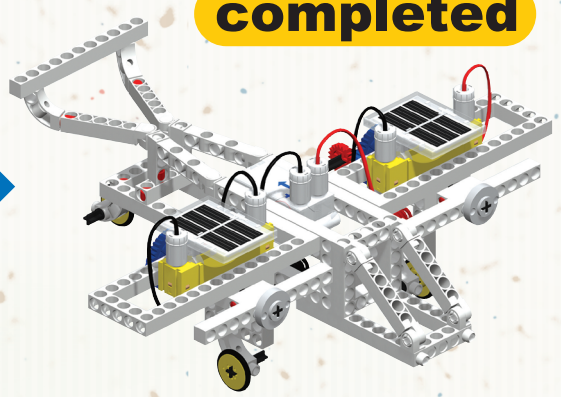

SOLAR POWER PLUS | Solar Car with Clutch

This car's clutch enables you to easily switch between making it drive forward, in reverse, and stopping.

PARTS NEEDED

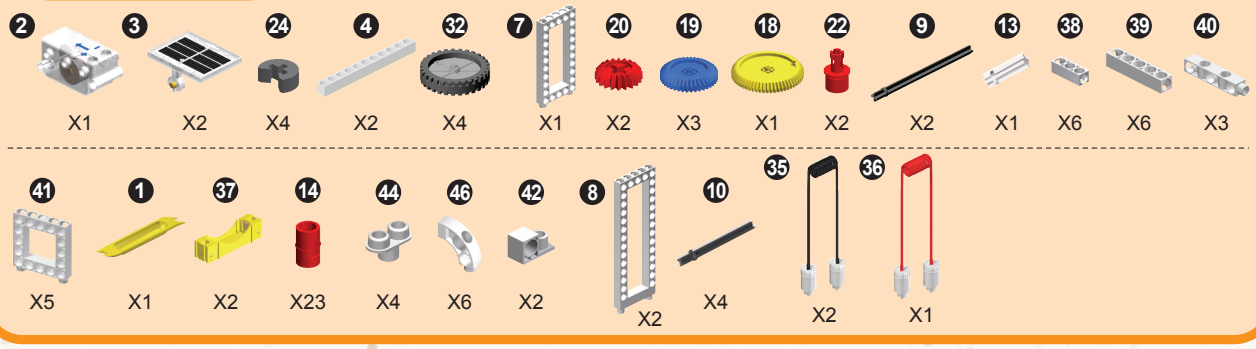

1.

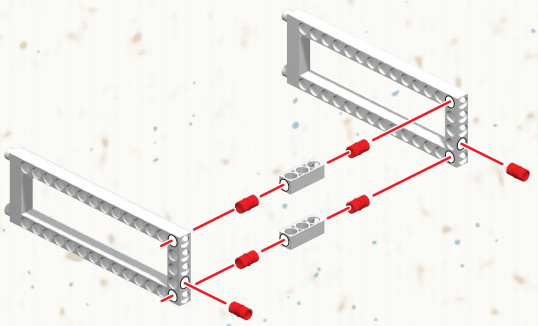

2.

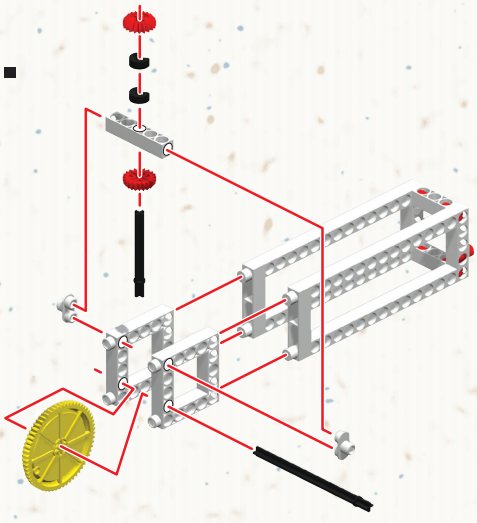

3.

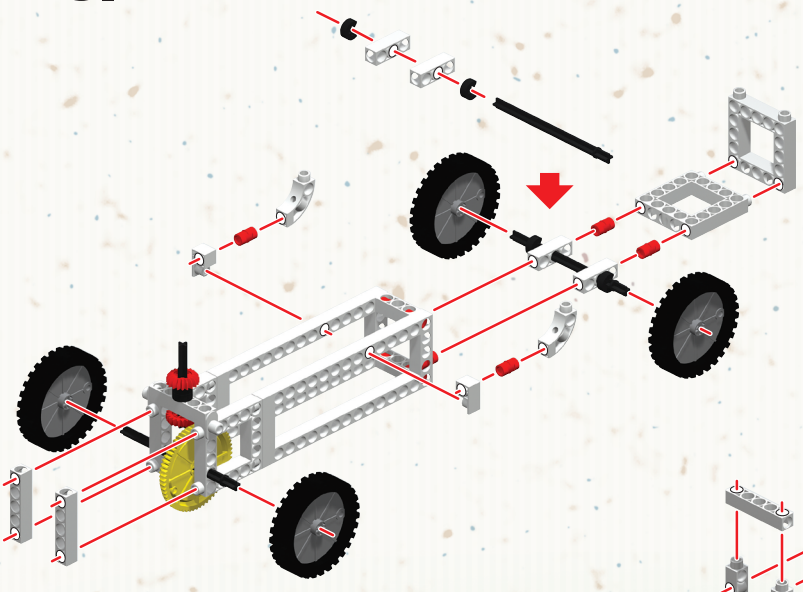

4.

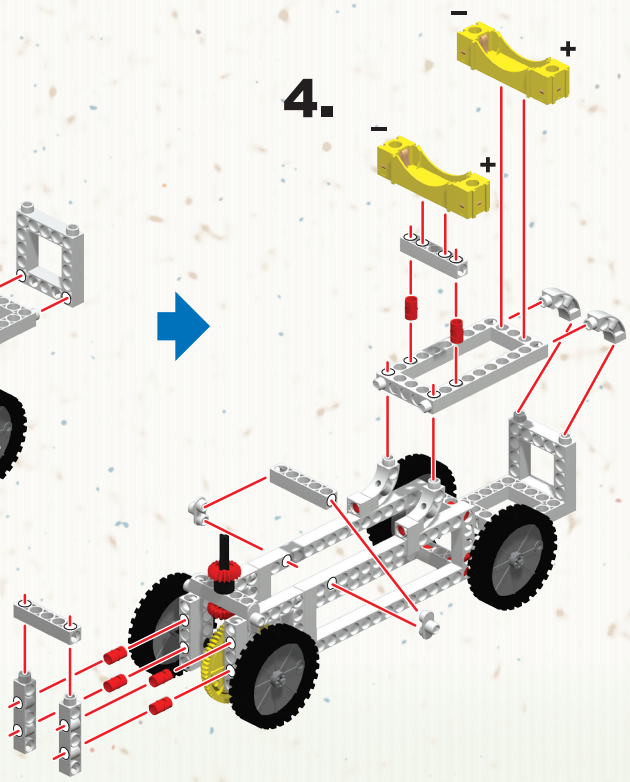

5.

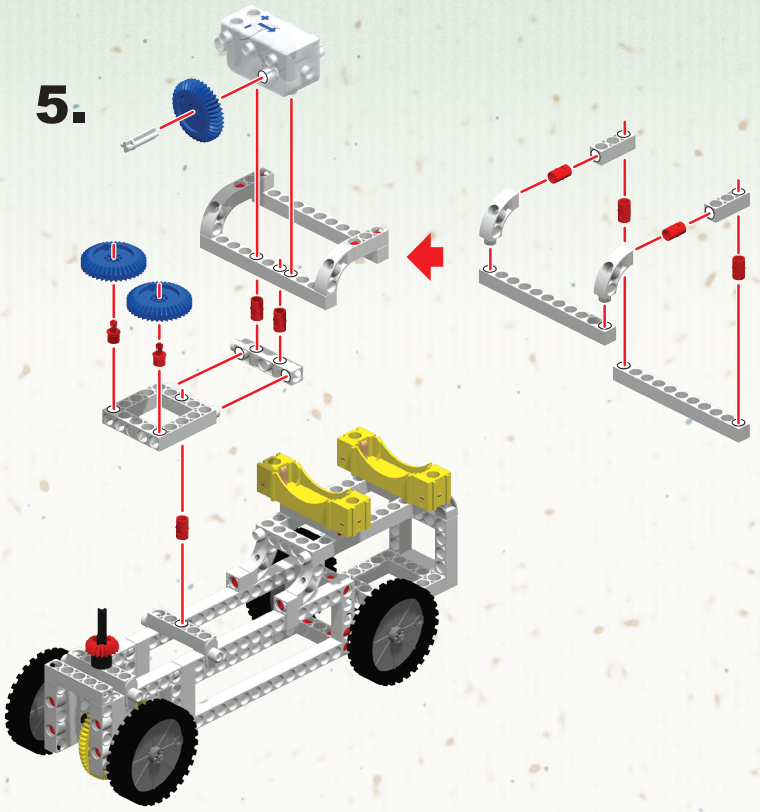

6.

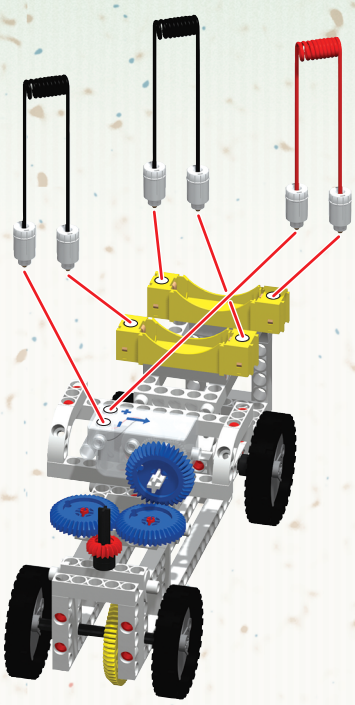

7.

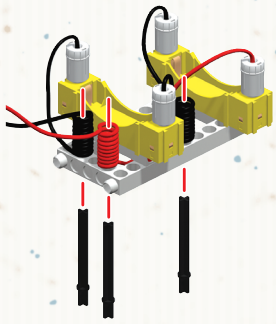

8.

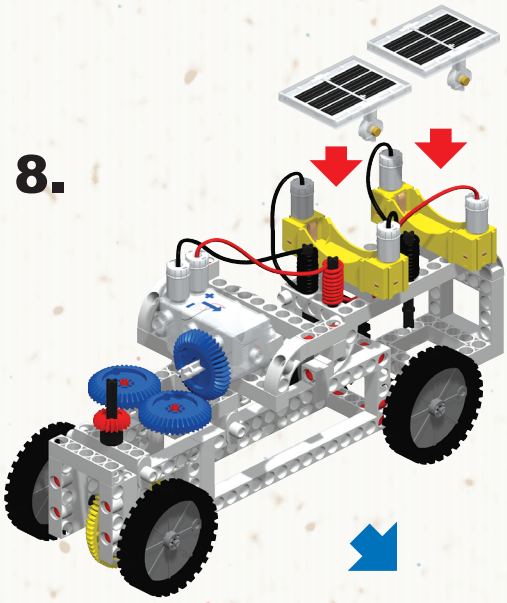

completed

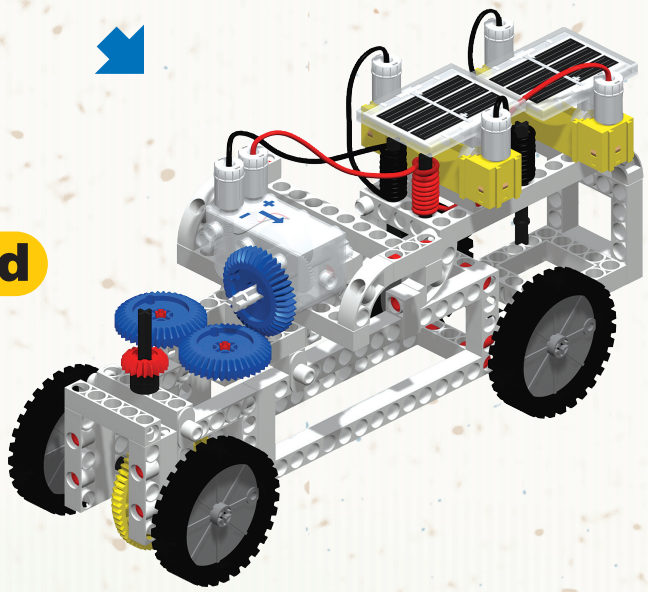

PARTS NEEDED

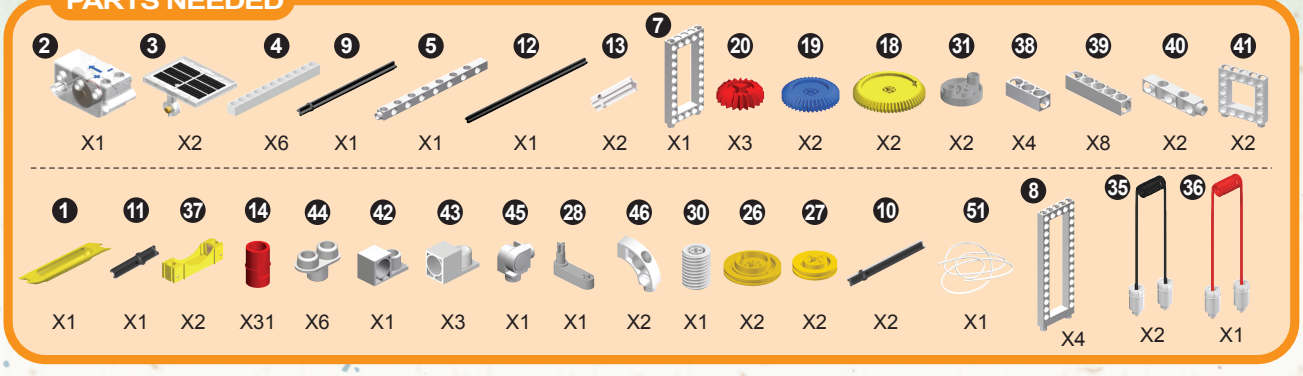

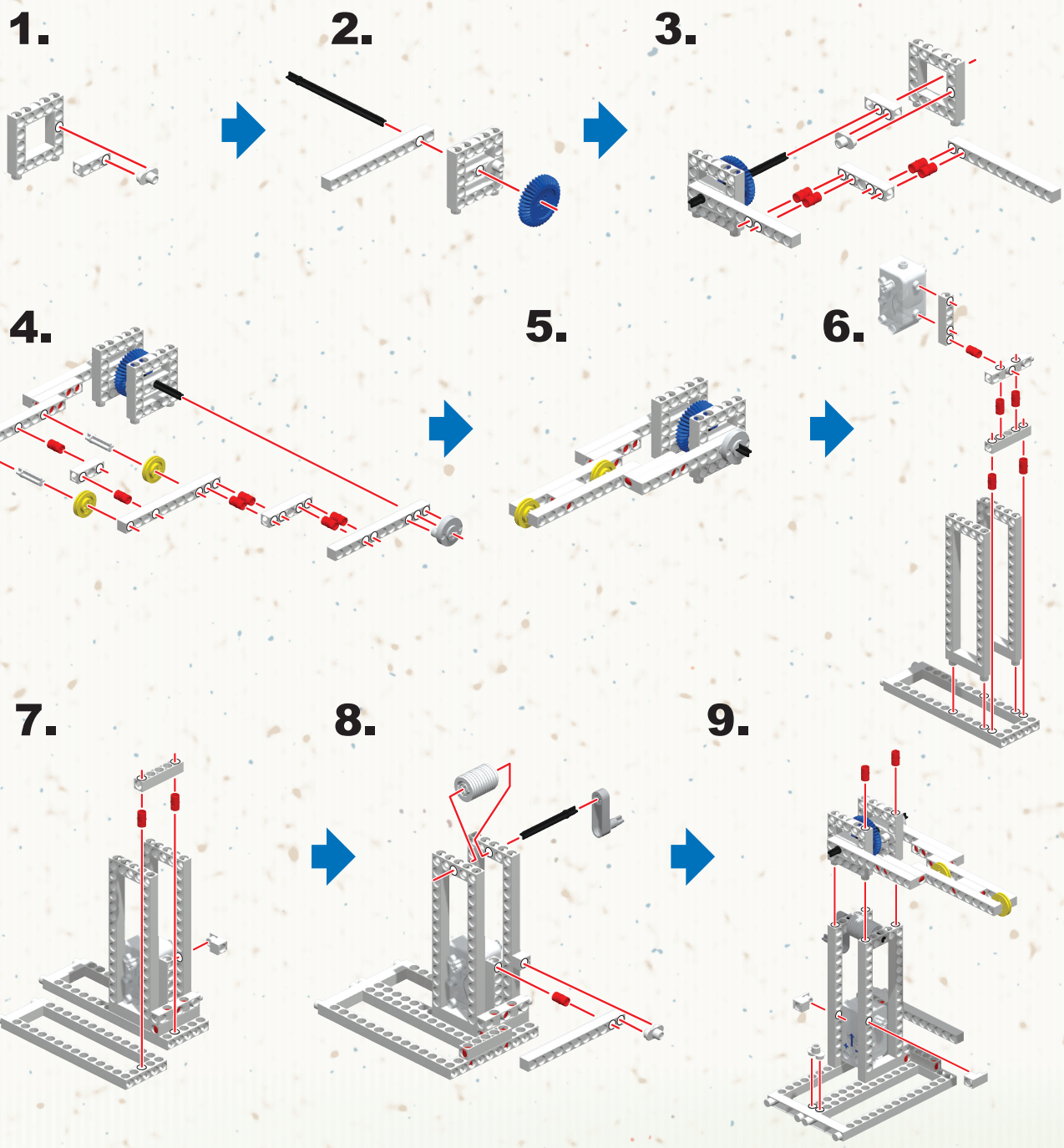

10.

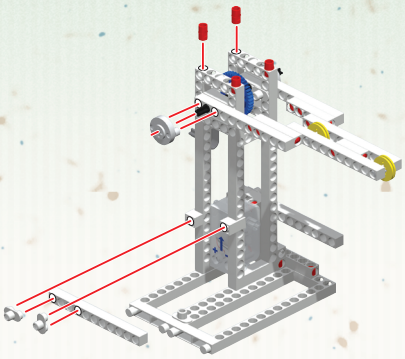

11.

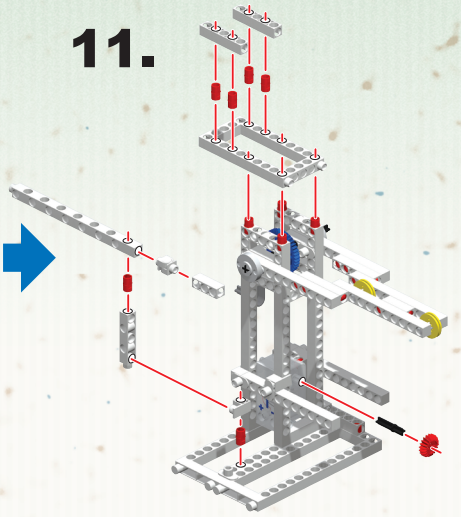

12.

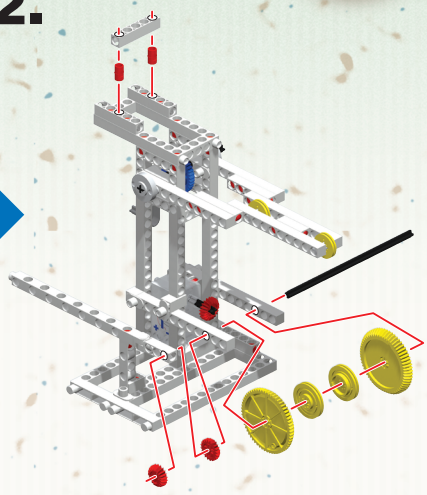

13.

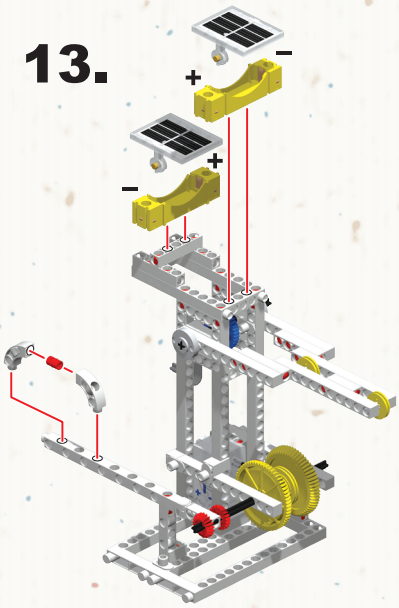

14.

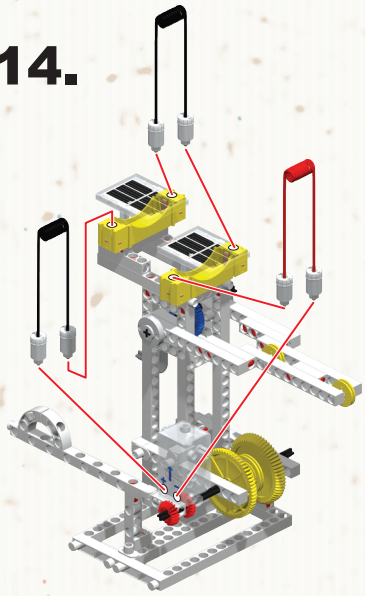

15.

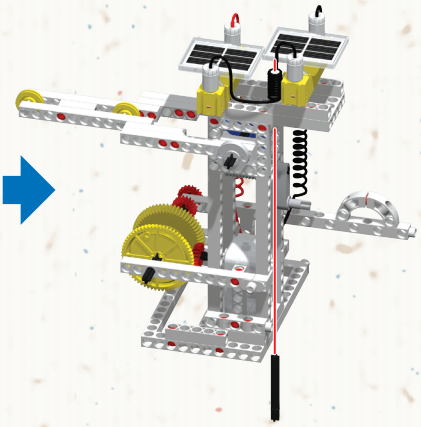

16.

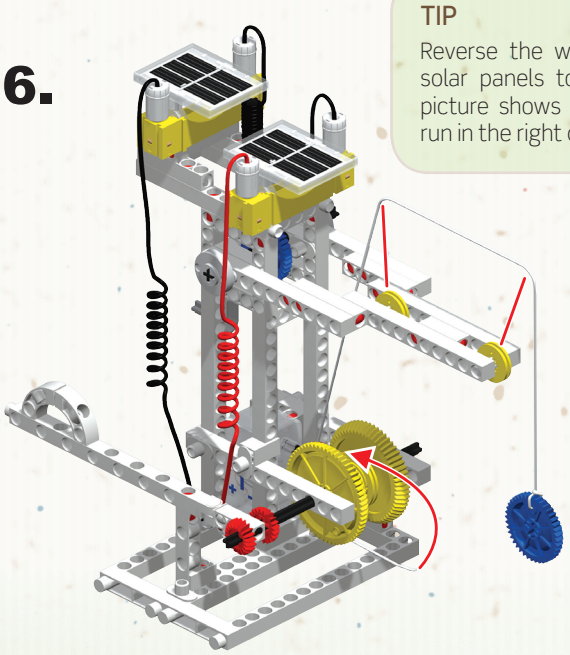

TIP

Reverse the wires connecting the solar panels to the motor as the picture shows to make your crane run in the right direction.

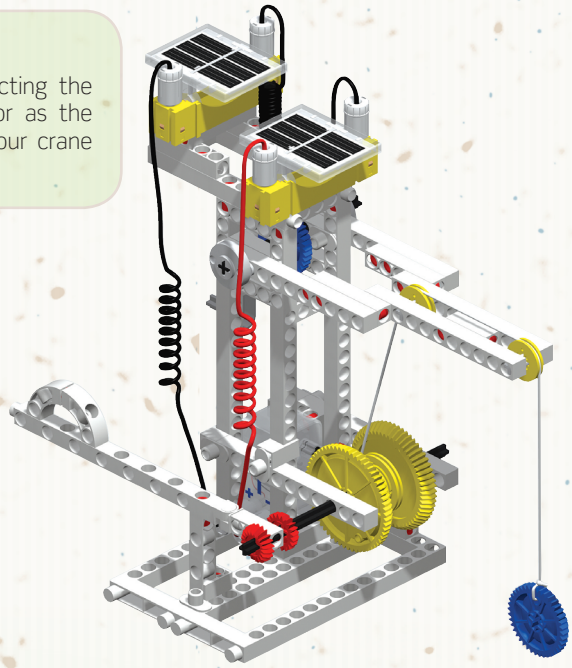

completed

PARTS NEEDED

2	3	24	4	7	20	19	22	9	13	5	38	39	40	41
X1	X2	X2	X3	X2	X3	X3	X2	X1	X1	X1	X1	X7	X2	X6

1	37	14	46	30	27	8	10	23	51	35	36
X1	X2	X28	X2	X1	X2	X6	X3	X2	X1	X1	X1

1.

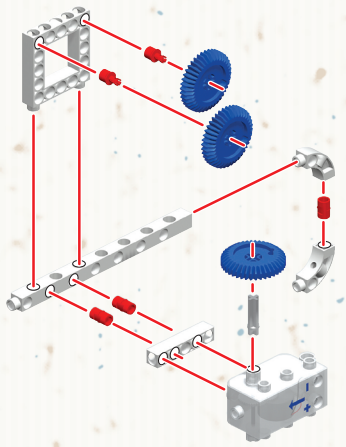

2.

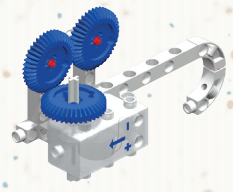

3.

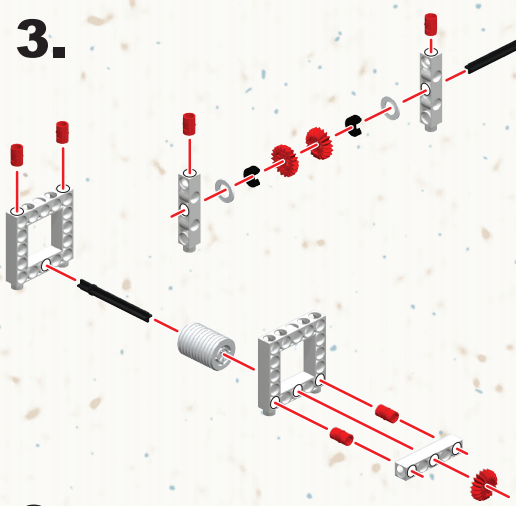

4.

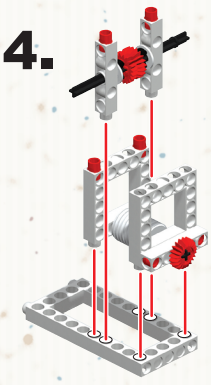

5.

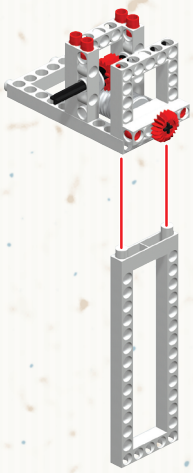

6.

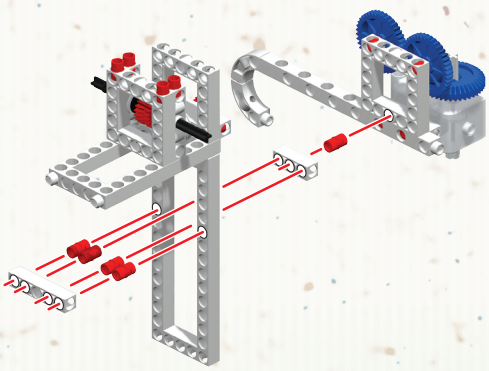

7.

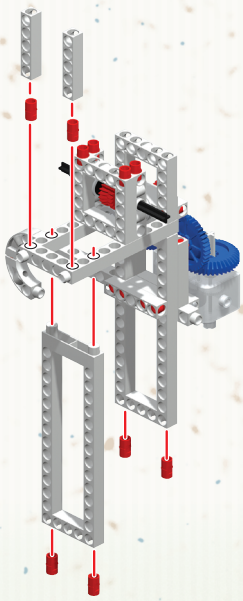

8.

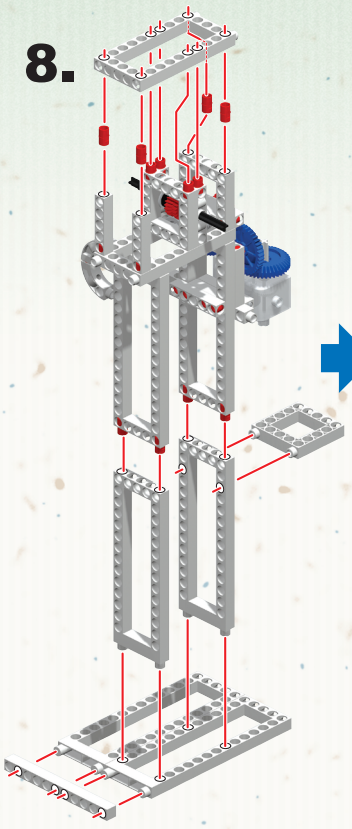

9.

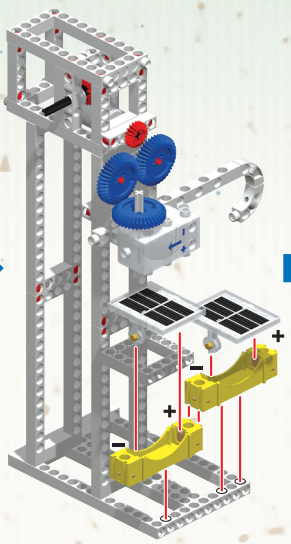

10.

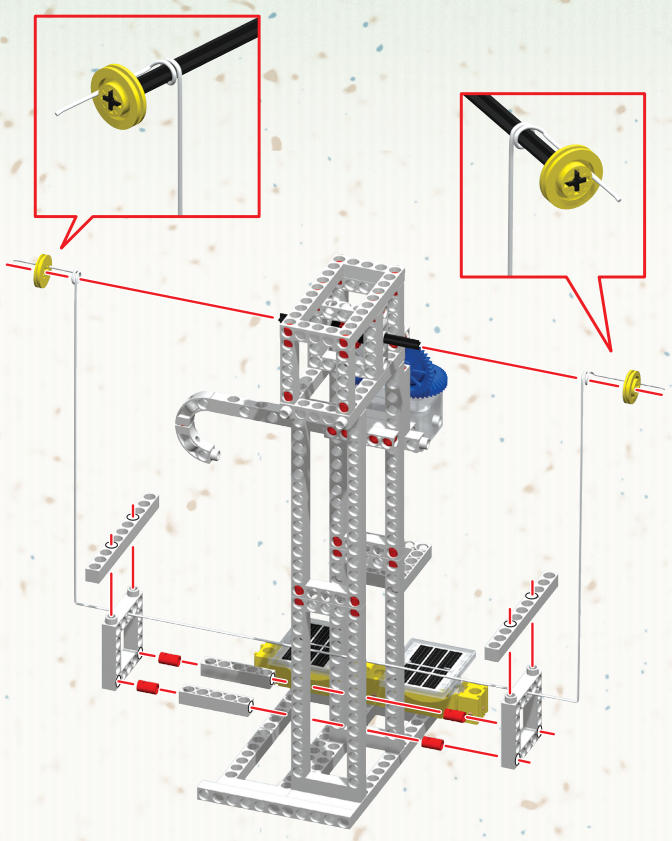

11.

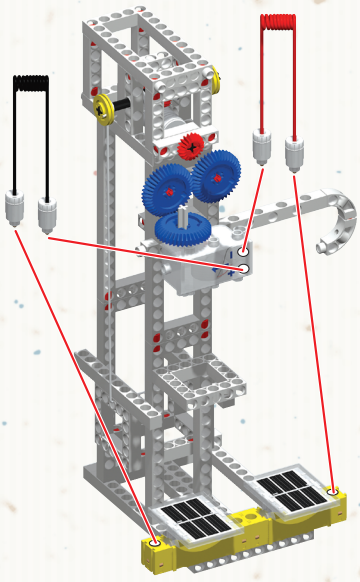

12.

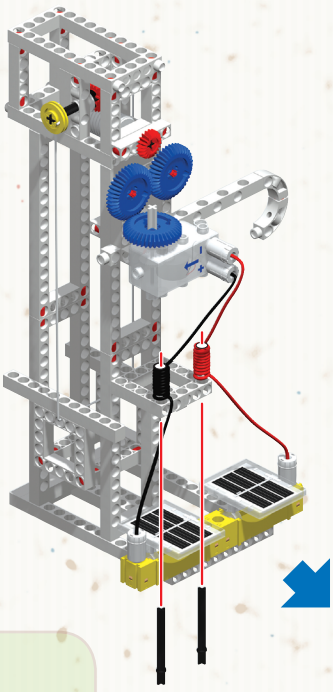

TIP

Reverse the wires connecting the solar panels to the motor as the picture shows to make your elevator run in the right direction.

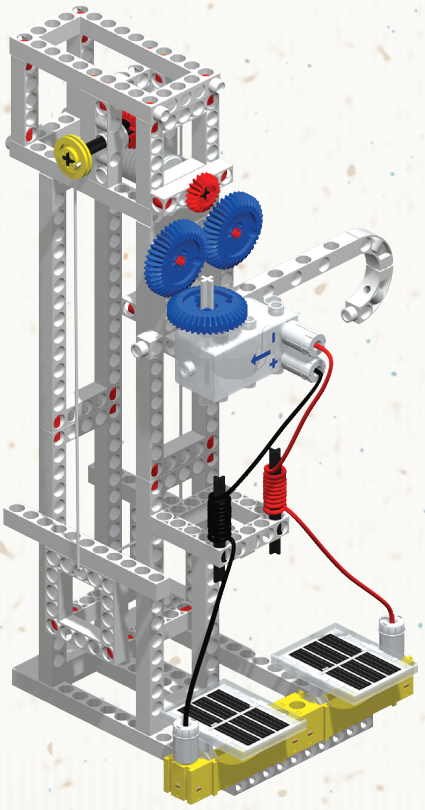

completed

This Cable Car can drive, stop, and change direction with the clutch attached to the gearbox. The stations at each end of the cable are designed to allow you to adjust them to accommodate locations of differing heights.

PARTS NEEDED

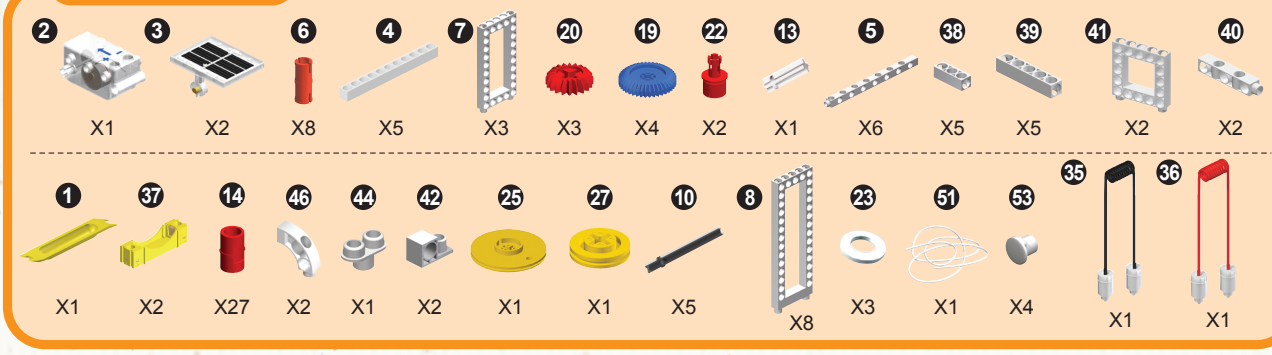

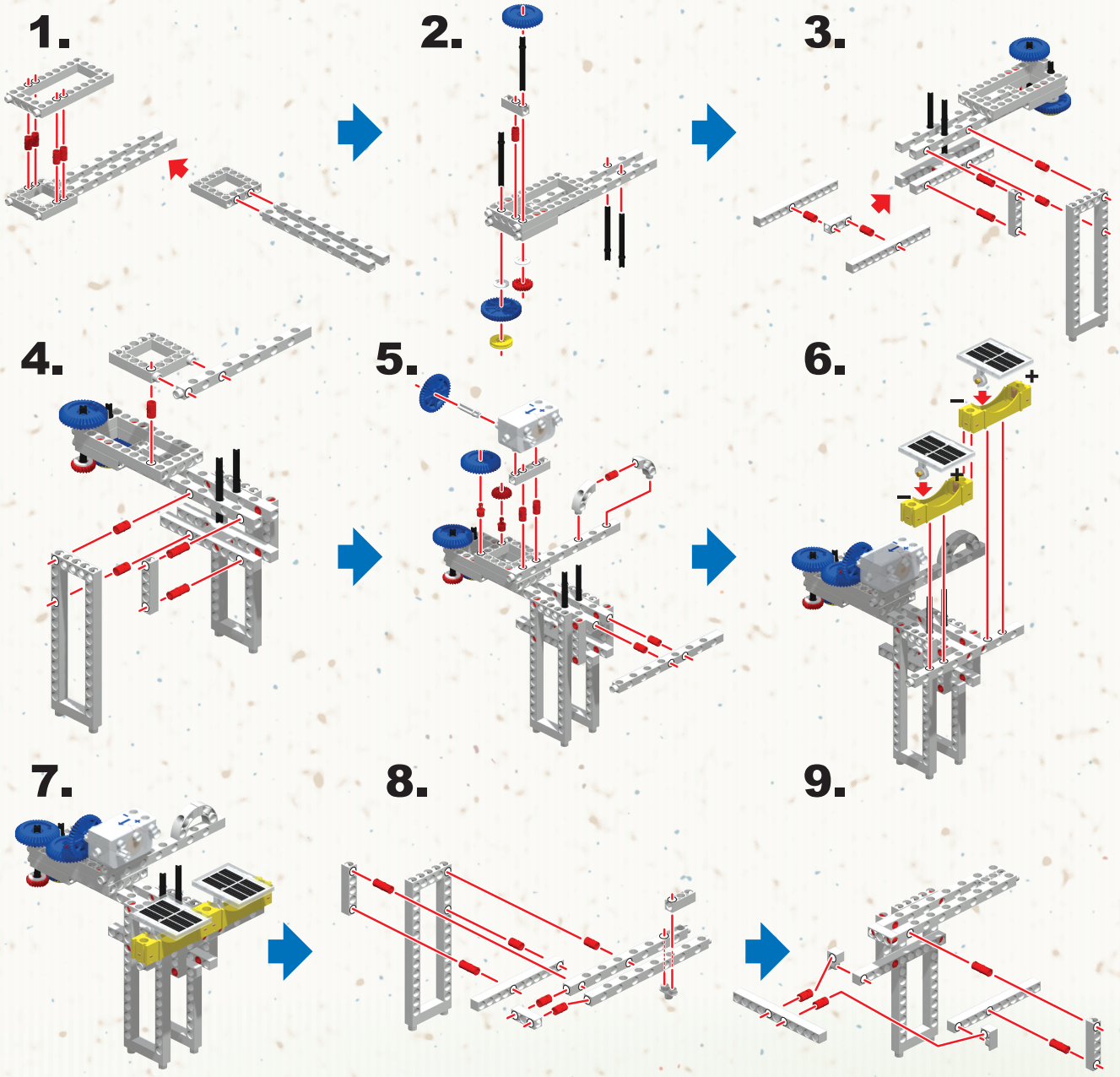

10.

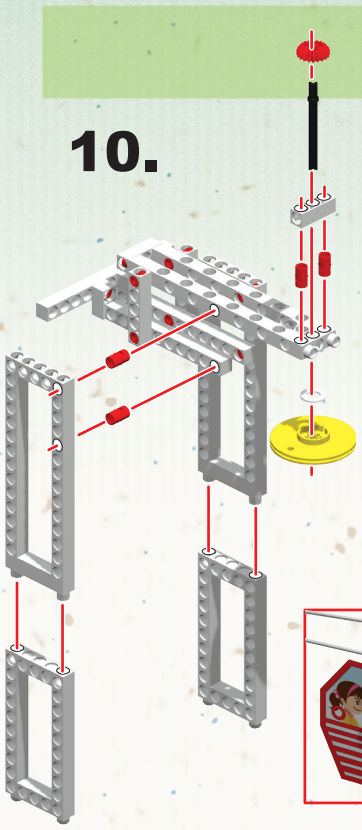

11.

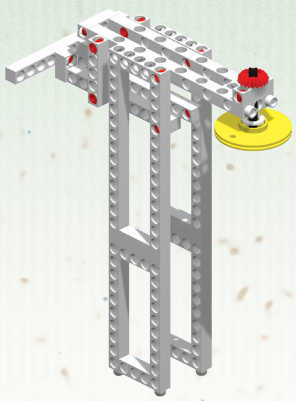

12.

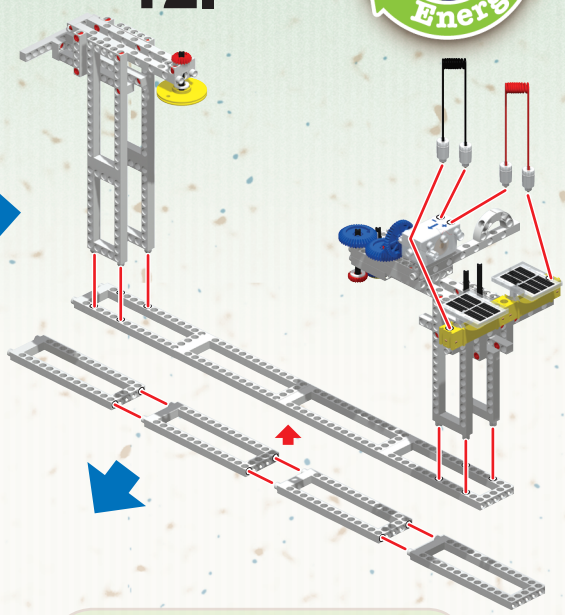

13.

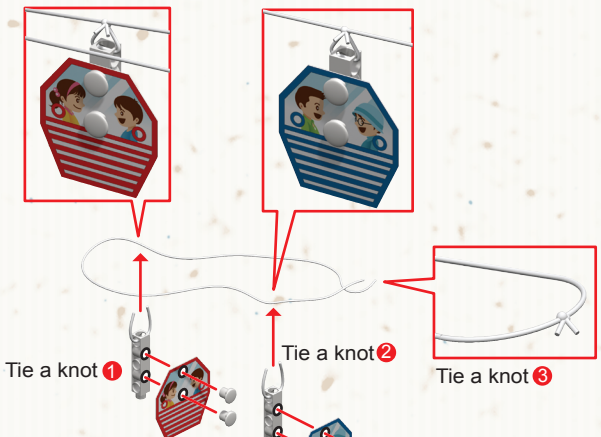

TIP

Untwist a short piece of string into thin threads. Use the thin thread to hang the cable car support on the cable wire as the pictures show. This will make the knot so small that the cable car can pass through the pulley's groove smoothly.

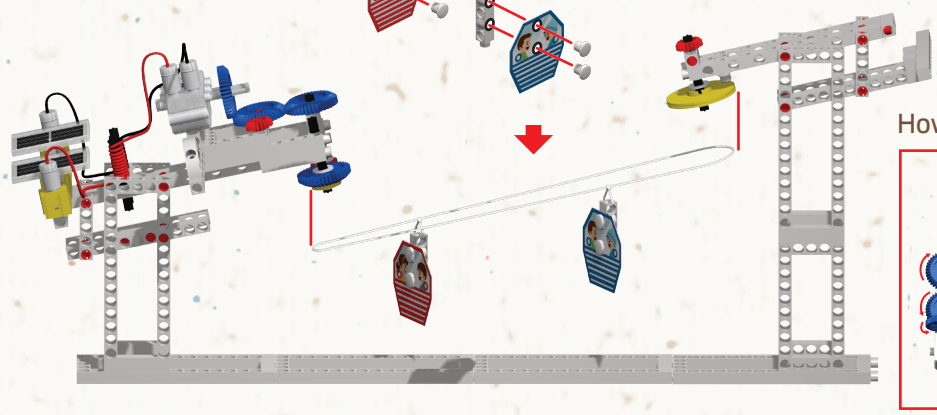

How to Operate the Car

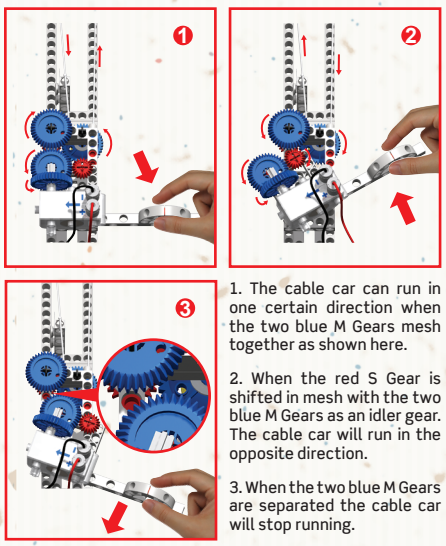

1. The cable car can run in one certain direction when the two blue M Gears mesh together as shown here.

2. When the red S Gear is shifted in mesh with the two blue M Gears as an idler gear. The cable car will run in the opposite direction.

3. When the two blue M Gears are separated the cable car will stop running.

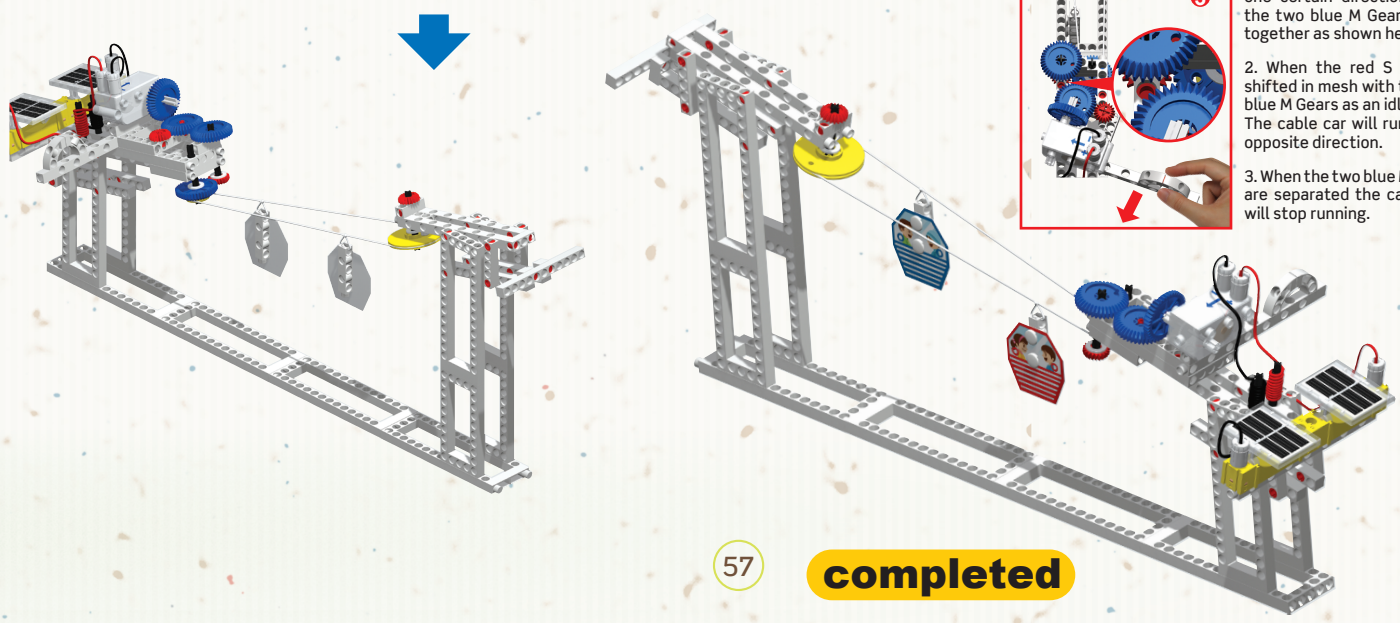

completed



#555001 Air+Water Power | 15 models 165 pcs



#555002 Wind Power 2.0 | 8 models 133 pcs



#555006 Solar Power | 6 models 177 pcs



#555004 Remote-Control Machines | 10 models 182 pcs



#555007 Solar Power PLUS | 22 models 265 pcs

Look for other great Construction Series kits from Thames & Kosmos!

www.thamesandkosmos.com

© Genius Toy Taiwan Co., Ltd., Taichung, Taiwan, R.O.C.
English Edits © 2010, 2013 Thames & Kosmos, LLC, Providence, RI
® Thames & Kosmos is a registered trademark of Thames & Kosmos, LLC.

Distributed in North America by Thames & Kosmos, LLC. Providence, RI 02903
Phone: 800-587-2872; Fax: 401-459-6775;
Email: support@thamesandkosmos.com

Made in Taiwan

0-3

REUSE RECYCLE